# WIND TURBINE CONDITION MONITORING & ASSESSMENT

IMI SENSORS
A PCB DIVISION

pcb.com/imi-sensors | 1 800 959 4464

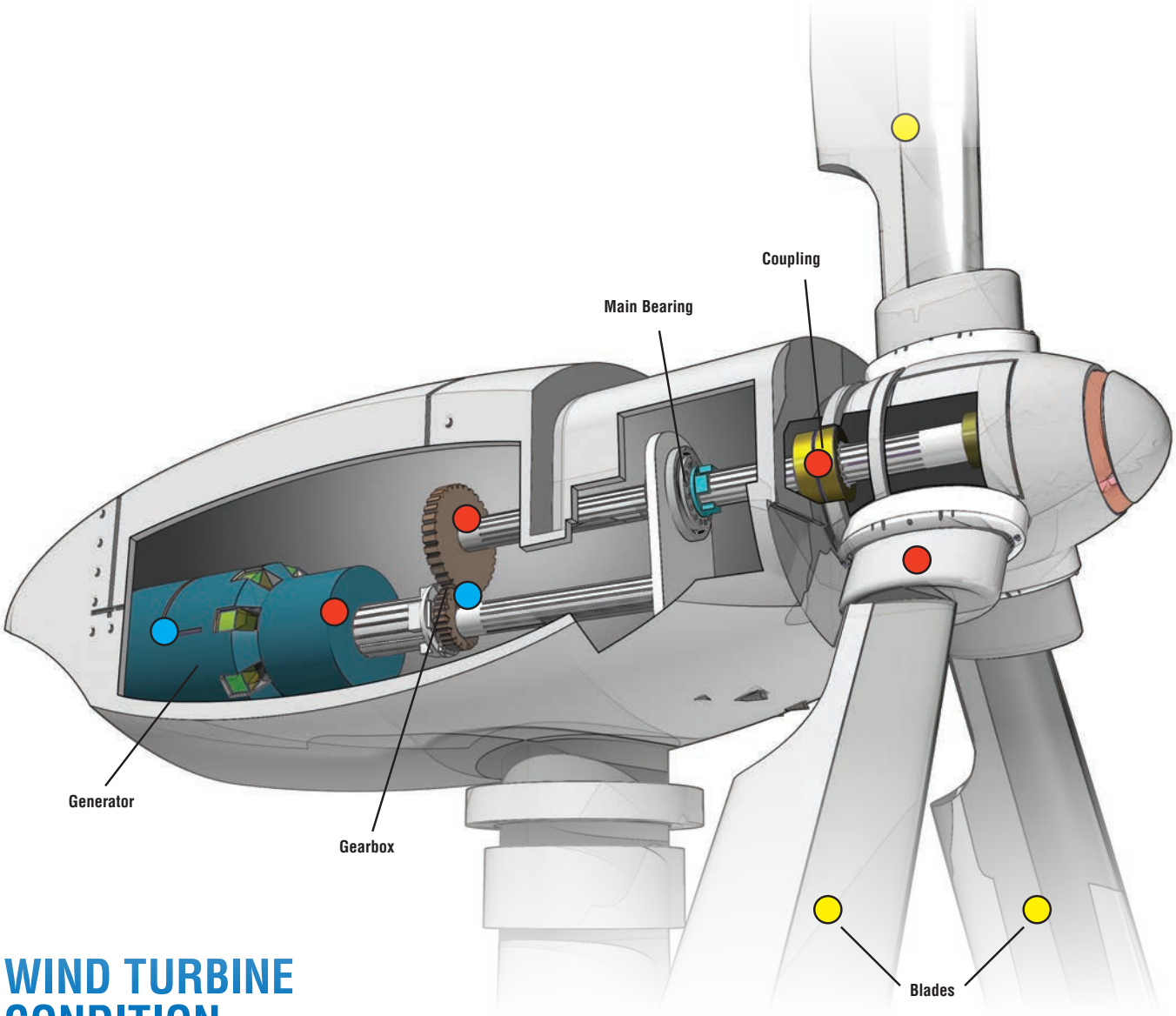


# WIND TURBINE CONDITION MONITORING

Some of the world's largest wind farms rely on IMI Sensors to keep their wind turbine operations at optimal performance by increasing reliability and reducing downtime. A broad range of industrial grade sensors from PCB® measure vibration, strain, torque and noise in new and existing wind turbines, providing measurements that are crucial to keep the operating health of these systems in tip-top shape.

## Sensor Placement Reference Key:

- **Continuous Monitoring:** Measurements on gearboxes
- **Load & Torque:** Measurements on couplings & bolt tightness
- **Modal Analysis:** Measurements on turbine blades

## LOW COST ICP® ACCELEROMETER

SERIES 607A

- Unique 360º swivel design
- Allows for easy cable orientation
- Integral or armored integral cable options available

## LOW COST ICP® ACCELEROMETER

MODEL 603C01

- General purpose, hermetically sealed
- IMI's most popular accelerometer
- Small footprint
- M12 connector version available

## EMBEDDABLE ACCELEROMETER

SERIES 660

- ICP®, charge, and low power versions available
- Easily designed into PC boards
- Variety of sensitivities

## LOW COST ICP® ACCELEROMETER

MODEL 602D01

- Easy installation in tight spaces
- 360º connector orientation
- Integral or armored integral cable options available
- M12 connector version available

## LOW COST ICP® ACCELEROMETER

MODEL 601A01

- Low noise
- Ceramic shear
- 100 mV/g

## LOW FREQUENCY ICP® ACCELEROMETER

MODEL 626B01

- Ideal for slow rotating equipment
- Low noise floor
- High output sensitivity

## CERAMIC SHEAR ICP® ACCELEROMETERS W/ OR W/O INTEGRAL POLYURETHANE CABLE

MODELS RTD602D91, RTD602D11

- Dual output vibration & Resistance Temperature Detector
- Sensitivity (±10%): 100 mV/g (10.2 mV/(m/s²))
- Measurement Range: ±50 g (±490 m/s²)
- Single-point ISO 17025 accredited calibration

# WIND TURBINE ASSESSMENT

The RS Technologies product line from PCB Piezotronics serves the product assembly and fastener manufacturing communities with a complete line of rotary and stationary torque sensors, hand torque wrenches, measuring instruments and threaded fastener torque-tension testing systems. For more information on any of these products, please visit www.pcb.com/fasteningtechnology.

## HAND TORQUE WRENCH

SERIES HT7000

- Durable ergonomic construction
- Lightweight and high strength
- Excellent accuracy of measurements
- Compatible with most data collectors

RS Technologies, manufactures a complete line of lightweight, precision hand torque wrenches that are among the lightest in the industry and durable enough to be used in the toughest industrial environments

Auditing the torque applied to tightened fasteners is an important part of assembly and maintenance of wind turbines. Monitoring the residual torque in assembled fasteners can be accomplished by using Series HT7000 Hand Torque Wrenches along with Model 920 Portable Digital Transducer Instrument.

## ROTARY TORQUE TRANSDUCER

SERIES PC9000

- Industrial-rated for power and pulse tools
- Measure torque only or torque and angle
- 2 mV/V output with matched shunt calibration

Series PC9000 Rotary Torque Sensors are widely used in the fastener assembly market to verify the performance of hand and power torque tools. These strain gage-based transducers are fitted on the output drive of a power tool and measure the torque applied by the tool to the fastener on an actual assembly. When equipped with a Model 920 Portable Digital Transducer Instrument, this measurement provides important information about tool shut off and can assist in establishing specifications for proper assembly.

## PORTABLE DIGITAL METER

MODEL 922

- Battery operated
- Cost-effective option
- Easy to operate
- Print both numeric and graphic data

Model 922 Portable Digital Meter can be used with other RS Technologies' products such as the Stationary Torque Transducer, Rotary Torque Transducers, Hand Torque Wrenches and more. The instrument is powerful and accurate enough to be used as a primary standard for auditing most torque applications in manufacturing and quality departments. When connected to a Rotary Torque Transducer, the unit can be used to test the capability of power tools, verify the accuracy of hand tools, monitor the capability of a fastening process, or audit the quality of an assembled joint.

## MICROPHONES & PREAMPLIFIER

- Type 1 compliant, modern prepolarized (0V) and externally polarized (200V) microphones
- High temperature (800 °C) 1472 °F microphones
- Water and dust resistant microphones for rough environments
- TEDS compliant and CE marked

Microphones are used to measure the noise generated by wind turbines both internal and external to the structure. PCB's new model 378A07, with a 0.1 Hz (+/-3dB) capability, was designed specifically for assessing the low frequencies required of this application. The gearbox and the main bearing are typical noise sources that are analyzed to predict possible machine faults and monitor for preventative maintenance. This will reduce maintenance costs and minimize downtime. Resonance frequencies can be determined and corrective actions can be taken to counteract and extend the life cycle of the components. A grouping of free-field, model 378B02 or value oriented, model 130 series array microphones can be used to pinpointed noise sources to help engineers target problem areas. PCB® microphones use standard coaxial cables and low-cost, constant-current power supplies that are interchangeable with other ICP® compatible sensors. They can be used with IMI's 4-20 mA DIN rail transmitters.

---

Sound level meters and noise monitoring systems from Larson Davis are designed to streamline both your handheld and remote noise monitoring. The SoundAdvisor™ Model 831C, an IEC 61672-1:2013, ANSI S1.4-2014 Class 1 integrating sound level meter, offers capabilities customizable to your specific testing needs. Both systems below are also available for short or long term rentals. Learn more at www.larsondavis.com.

LARSON DAVIS
A PCB DIVISION

## SOUNDADVISOR™ SOUND LEVEL METER

MODEL 831C

- Connect over cellular, WiFi, or wired networks
- Control meter and view data via web browser
- Easy setup and data download
- Measure < 6.5 dBa with low noise mic option

## SOUNDADVISOR™ SOUND LEVEL METER

MODEL 831C

- From meter to modem, self-contained system for easy portability
- Simple remote deployment with solar power options
- Review data on demand and control meter remotely
- Receive real-time alerts on your mobile device

# WIND TURBINE ASSESSMENT

Instrumentation that can provide voltage excitation and bridge completion is ideal for this measurement. Strain gages can be placed anywhere on the blade, but the distribution varies with the amount of sensors. These sensors should be in a configuration to optimally model the stress on the blade, taking measurements from both the flap-wise and edge-wise directions.

## ICP® STRAIN SENSOR

MODEL RHM240A02

- Measure Longitudinal Strain on Machinery Structures
- Monitor Quality, Safety and Reliability
- Robust Construction Endures Harsh, Industrial Environments
- Simple Installation is Non-Invasive to Process

PCB's Model RHM240A02 single axis ICP® Strain Sensor is structured with a quartz sensing element and microelectronic circuitry in a low profile titanium housing, making this sensor ideal for high resolution measurements of dynamic strain on wind turbine blades. This unit is compatible with PCB's ICP® Sensor signal conditioners and is capable of driving long cables.

## LOAD CELLS

SERIES 1200 & SERIES 1400

- Low deflection, high accuracy
- Low profile for easy installation
- NIST traceable, A2LA accredited calibration to ISO 17025
- Temperature & pressure compensated

PCB® manufactures a wide range of high accuracy, strain gage load cells. The 1200 and 1400 series load cells are compact and are available in various capacities from 250 lbf and up. While the 1200 series is a general purpose load cell with a cycle life of 10 million plus reversing cycles, the 1400 series is a fatigue rated load cells with a life cycle of 100 million plus reversing cycles. The 1400 series load cell is available in both single and dual bridge configurations.

## TORKDISC® ROTARY TORQUE SENSOR SYSTEM

SERIES 5300

- Digital system alleviates noise & data corruption
- Immune to RF & EMI
- Maintenance free

PCB's Series 5300 TORKDISC® in-line rotary torque sensor systems are designed for test applications requiring a robust rotary torque transducer where axial space is at a premium.

## SINGLE CHANNEL TELEMETRY SYSTEMS

PCB's single channel telemetry systems provide a simple, accurate method of conditioning and transmitting strain signals on rotating or moving machinery while operating in a completely contactless mode. Power is transferred inductively and the signal is RF-transferred between the moving and static component - no brushes or wires required. This method guarantees an absolute maintenance-free continuous operation and accurate transmission of measured data. Series 8180 performs a remote shunt calibration when the unit is powered up.

Factory configurable for strain, thermocouple, voltage, or ICP®

Easy to use, wear & maintenance free

Extremely robust, dust & waterproof, yet compact and lightweight

Contact-free signal transmission and power supply for continuous operation

Remote shunt calibration Adjustable output

### RECEIVING UNIT

MODEL 8180-CUTO

Extremely robust, dust and waterproof

Remote shunt calibration

Factory configurable for strain, thermocouple, voltage, or ICP®

### ROTOR ELECTRONICS

MODEL 8180-RE110A

Compact size, lightweight

Easy to use, wear and maintenance free

Contact free signal transmission and power supply

### STATOR HEAD

MODEL 8180-SH2

Compact size, lightweight

Inductive power

Distance to shaft 10 mm

### STATOR HEAD

MODEL 8180-SH4

Compact size, lightweight

Inductive power

Distance to shaft 200 mm

# WIND TURBINE ASSESSMENT

Test engineers have used the principles of modal analysis, using PCB's ICP® accelerometers, Modally Tuned® Impulse Hammers and ICP® quartz force sensors to determine the strength and structural integrity. Single-axis and triaxial MEMS DC accelerometers are placed on the tip of each blade. The photo on page 9 shows a wind turbine blade mounting in a dynamically controlled, hydraulic structural loading machine, along with the various sensors and cables mounted on the blade.

## MODAL SHAKERS & HAMMERS

The Modal Shop offers a complete line of electrodynamic modal and vibration shakers ideal for applications ranging from experimental modal analysis and general vibration testing to accelerometer calibration. Shakers are also available through the TMS Rental Program in addition to accelerometers, force sensors, hammers, microphones and sound level meters. As a global leader in sound and vibration, The Modal Shop designs and manufactures a comprehensive product range of dynamic calibration systems.

For structural excitation, Modally Tuned® ICP® impulse hammers and shakers are also available, allowing PCB® to be a complete, front-end instrumentation provider. If the excitation is coming from a shaker, The Modal Shop offers a full line of modal and vibration shakers. The Model 2060E, a lightweight electrodynamic modal exciter, is capable of providing up to 60 lbf (267 N) of peak force excitation in a small footprint weighing just 37 pounds (17 kg).

### ICP® IMPACT HAMMER

MODEL 086D20

- Sensitivity: (±15%) 1 mV/lbf (0.23 mV/N)
- Measurement Range: ±5000 lbf pk (±22,240 N pk)
- Hammer Mass: 2.4 lb (1.1 kg)

VISIT WWW.THEMODALSHOP.COM FOR MORE INFORMATION

THE MODAL SHOP
AN AMPHENOL COMPANY

### MODAL SHAKER

MODEL 2060E

- Through-hole armature provides simple setup with modal stingers
- Lightweight & portable – weighing just 37 lb (17 kg)
- Trunnion base provides flexibility when choosing best exciter location(s)
- 1.4” stroke supplies adequate input energy for almost any modal test application

VISIT WWW.THEMODALSHOP.COM FOR MORE INFORMATION

## MEMS DC RESPONSE

Series 3711 (singe-axis), 3713 (triaxial) and 3741(single-axis) MEMS DC response accelerometers are designed to measure low frequency vibration and motion and are offered in full-scale ranges from ± 2 to ± 200 g to accommodate a variety of testing requirements. The units feature gas-damped, silicon MEMS sensing elements for uniform, repeatable performance and offer high frequency overload protection. Electrically, the units offer a single ended or differential output signal with power, signal and ground leads for each channel. Supply voltage regulation permits operation from + 6 to + 30 VDC and the low-noise, low-impedance output signal may be transmitted over long cable lengths without degradation.

### SINGLE-AXIS MEMS DC ACCELEROMETER

SERIES 3711

- Hermetically sealed
- Robust titanium housing
- Single ended output

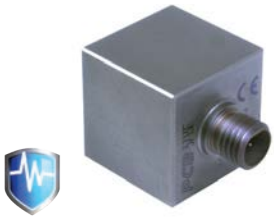

### TRIAXIAL MEMS DC ACCELEROMETER

SERIES 3713

- Hermetically sealed
- Robust titanium housing
- Single ended output

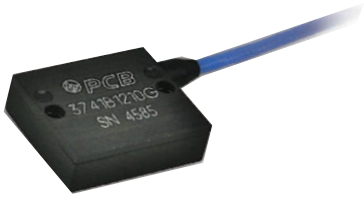

### TRIAXIAL MEMS DC ACCELEROMETER

SERIES 3741

- Low profile and low mass
- Anodized aluminum housing
- Differential output

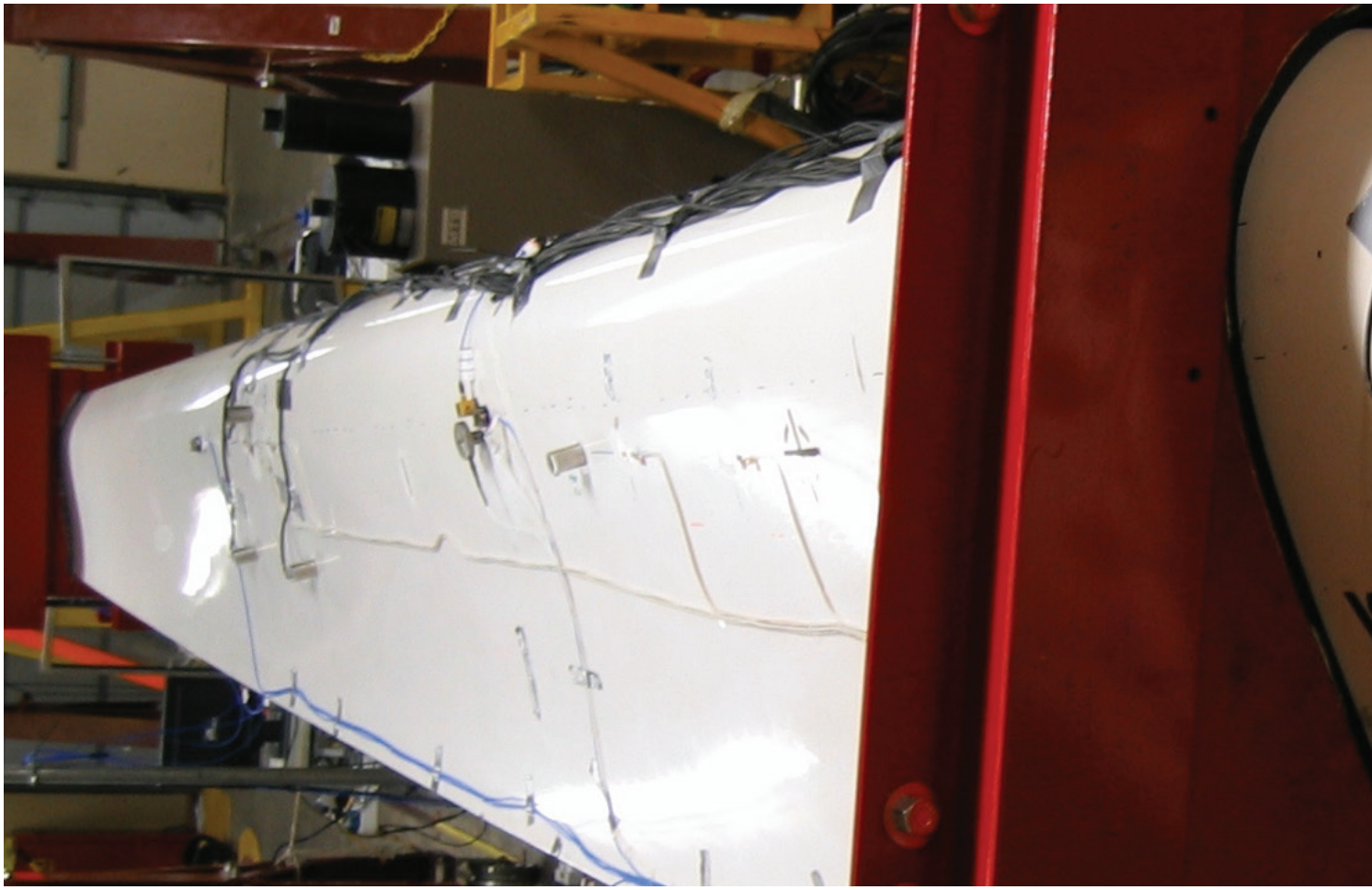

# BLADE PITCH CONTROL

PCB® pressure sensors have been specifically designed to provide high accuracy, excellent repeatability and unmatched long term stability. This is achieved by a unique thin-film process, which "atomically fuses" sensitive resistive material directly to the pressure sensing element. This process eliminates the traditional use of adhesives, as well as the need for a "fluid fill." The pressure sensing element is mated to an integrated circuit, programmed to provide the required span, zero and output configuration. Then, to ensure reliability, the sensing cores are encapsulated by an all-welded, corrosion resistant, stainless steel diaphragm and housing.

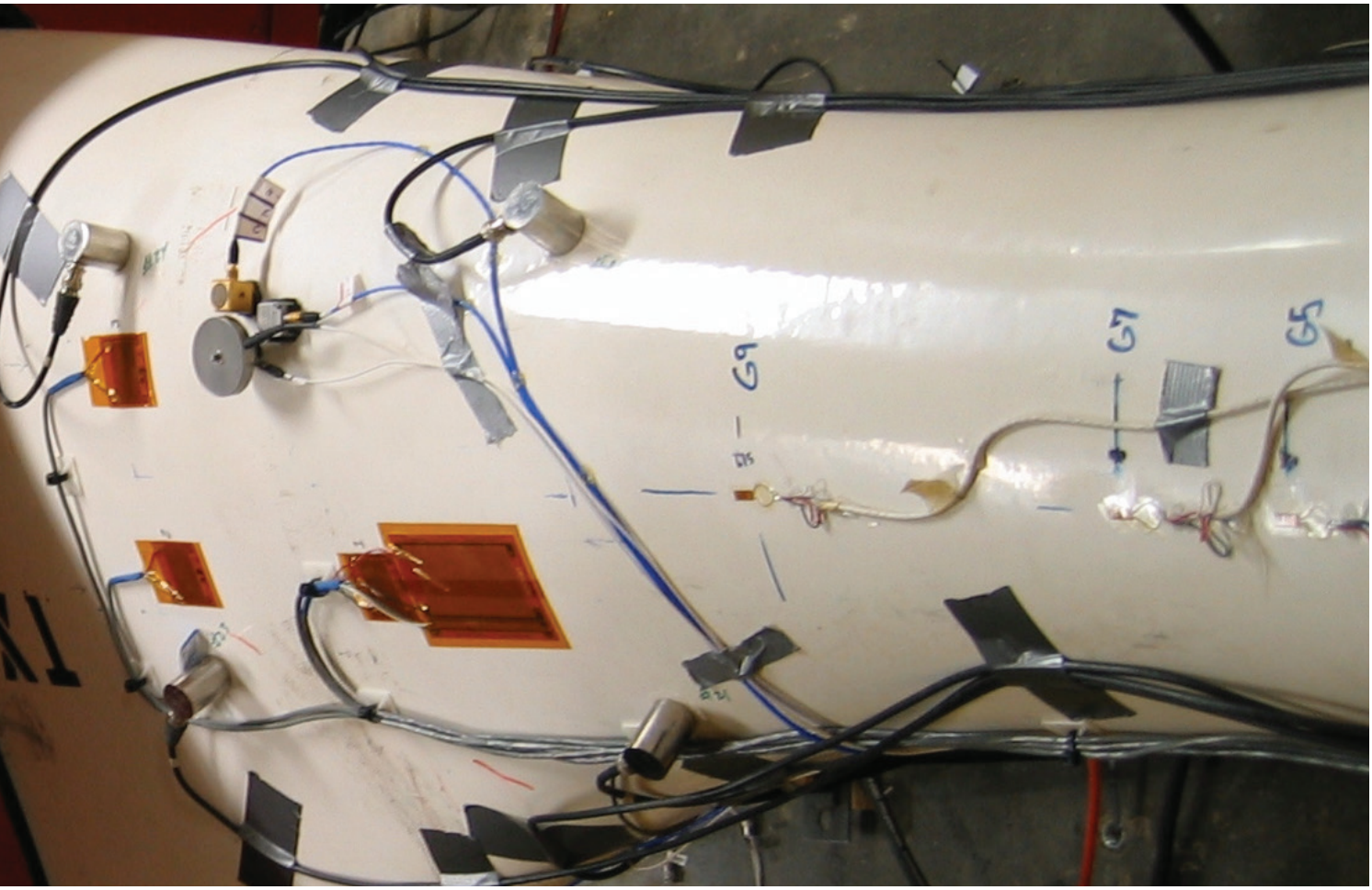

## PRESSURE TRANSDUCERS & TRANSMITTERS

MODEL 2060E

- Available in gauge, absolute, and sealed gauge
- High precision final assembly
- Configure with a variety of electrical connectors and integral cables

Blade mounted pressure sensors can provide a signal to a blade pitch controller, which uses the signal to adjust the blade pitch to an acceptable level. PCB Piezotronics, Inc. pressure transducers, Series 1500, achieve the accuracy, repeatability and stability requirements of wind turbine measurement and control.

IMI SENSORS
A PCB DIVISION

**3425 Walden Avenue, Depew, NY 14043 USA**

pcb.com/imi-sensors | imi@pcb.com | 800 959 4464 | +1 716 684 0003

© 2026 PCB Piezotronics - all rights reserved. PCB Piezotronics is a wholly-owned subsidiary of Amphenol Corporation. Endevco is an assumed name of PCB Piezotronics of North Carolina, Inc., which is a wholly-owned subsidiary of PCB Piezotronics, Inc. Accumetrics, Inc. and The Modal Shop, Inc. are wholly-owned subsidiaries of PCB Piezotronics, Inc. IMI Sensors and Larson Davis are Divisions of PCB Piezotronics, Inc. Except for any third party marks for which attribution is provided herein, the company names and product names used in this document may be the registered trademarks or unregistered trademarks of PCB Piezotronics, Inc., PCB Piezotronics of North Carolina, Inc. (d/b/a Endevco), The Modal Shop, Inc. or Accumetrics, Inc. Detailed trademark ownership information is available at www.pcb.com/trademarkownership.

IMI-APP-Wind-0926