PCB Load & Torque Inc. claims proprietary rights in the information disclosed hereon. Neither it nor any reproduction thereof will be disclosed to others without the written consent of PCB Load and Torque Inc.

26440

REVISIONS		
REV	DESCRIPTION	ECO
B	REMOVED PIN OUT VIEW - 02.22.18, PTE	47634

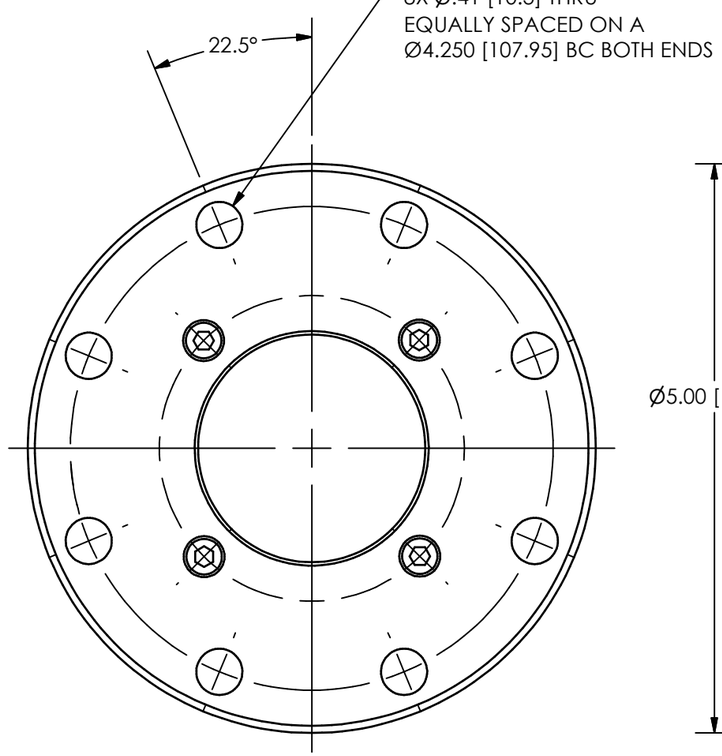

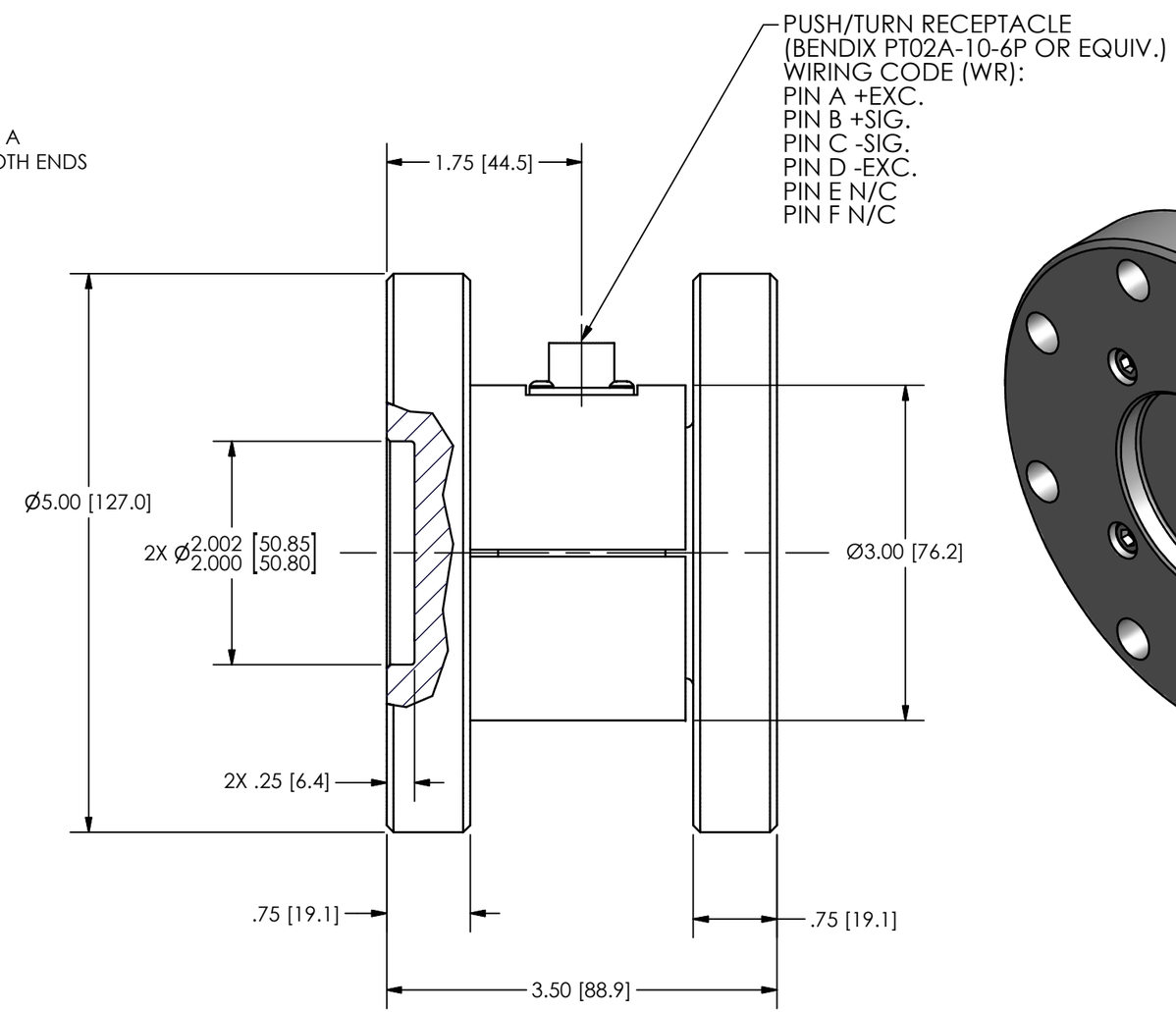

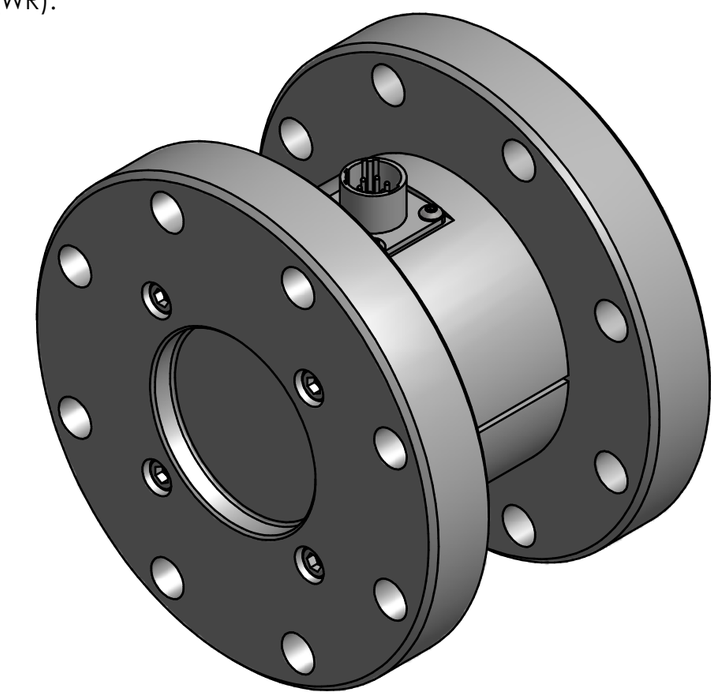

UNLESS OTHERWISE SPECIFIED TOLERANCES ARE:	
DIMENSIONS IN INCHES	DIMENSIONS IN MILLIMETERS [IN BRACKETS]
DECIMALS XX ±.01 XXX ±.005	DECIMALS X ± 0.3 XX ± 0.13
ANGLES ± .5 DEGREES	ANGLES ± .5 DEGREES
FILLETS AND RADII .015 MAX	FILLETS AND RADII 0.38 MAX

DRAWN		CHECKED		ENGINEER	
MDF	01.18.12	ECB	01.26.12	PTE	1/18/12

TITLE

OUTLINE DRAWING
MODEL 2302-XXA SERIES
REACTION TORQUE SENSOR

PCB LOAD & TORQUE
A PCB GROUP COMPANY
24350 Indoplex Circle, Farmington Hills,MI 48335
(716) 684-0001 E-MAIL: ltinfo@pcbloadtorque.com

DWG. NO. 26440

SCALE: FULL SHEET 1 OF 1