PCB PIEZOTRONICS
AN AMPHENOL COMPANY

Model 176A31

Differential charge output pressure sensor with UHT-12™ element, 6.0 pC/psi, +1400 F

Installation and Operating Manual

For assistance with the operation of this product,
contact the PCB Piezotronics, Inc.

Toll-free: 716-684-0001
24-hour SensorLine: 716-684-0001
Fax: 716-684-0987
E-mail: info@pcb.com
Web: www.pcb.com

Total Customer Satisfaction
PCB PIEZOTRONICS

Repair and Maintenance

PCB guarantees Total Customer Satisfaction through its "Lifetime Warranty Plus" on all Platinum Stock Products sold by PCB and through its limited warranties on all other PCB Stock, Standard and Special products. Due to the sophisticated nature of our sensors and associated instrumentation, **field servicing and repair is not recommended and, if attempted, will void the factory warranty**.

Beyond routine calibration and battery replacements where applicable, our products require no user maintenance. Clean electrical connectors, housings, and mounting surfaces with solutions and techniques that will not harm the material of construction. Observe caution when using liquids near devices that are not hermetically sealed. Such devices should only be wiped with a dampened cloth—never saturated or submerged.

In the event that equipment becomes damaged or ceases to operate, our Application Engineers are here to support your troubleshooting efforts 24 hours a day, 7 days a week. Call or email with model and serial number as well as a brief description of the problem.

Calibration

Routine calibration of sensors and associated instrumentation is necessary to maintain measurement accuracy. We recommend calibrating on an annual basis, after exposure to any extreme environmental influence, or prior to any critical test.

PCB Piezotronics is an ISO-9001 certified company whose calibration services are accredited by A2LA to ISO/IEC 17025, with full traceability to SI through N.I.S.T. In addition to our standard calibration services, we also offer specialized tests, including: sensitivity at elevated or cryogenic temperatures, phase response, extended high or low frequency response, extended range, leak testing, hydrostatic pressure testing, and others. For more information, contact your local PCB Piezotronics distributor, sales representative, or factory customer service representative.

Returning Equipment

If factory repair is required, our representatives will provide you with a Return Material Authorization (RMA) number, which we use to reference any information you have already provided and expedite the repair process. This number should be clearly marked on the outside of all returned package(s) and on any packing list(s) accompanying the shipment.

Contact Information

PCB Piezotronics, Inc.
3425 Walden Ave.
Depew, NY14043 USA
Toll-free: (800) 828-8840
24-hour SensorLine: (716) 684-0001
General inquiries: info@pcb.com
Repair inquiries: rma@pcb.com

For a complete list of distributors, global offices and sales representatives, visit our website, www.pcb.com.

Safety Considerations

This product is intended for use by qualified personnel who recognize shock hazards and are familiar with the precautions required to avoid injury. While our equipment is designed with user safety in mind, the protection provided by the equipment may be impaired if equipment is used in a manner not specified by this manual.

Discontinue use and contact our 24-Hour Sensorline if:

- Assistance is needed to safely operate equipment
- Damage is visible or suspected
- Equipment fails or malfunctions

For complete equipment ratings, refer to the enclosed specification sheet for your product.

Definition of Terms and Symbols

The following symbols may be used in this manual:

DANGER
Indicates an immediate hazardous situation, which, if not avoided, may result in death or serious injury.

CAUTION
Refers to hazards that could damage the instrument.

NOTE
Indicates tips, recommendations and important information. The notes simplify processes and contain additional information on particular operating steps.

The following symbols may be found on the equipment described in this manual:

This symbol on the unit indicates that high voltage may be present. Use standard safety precautions to avoid personal contact with this voltage.

This symbol on the unit indicates that the user should refer to the operating instructions located in the manual.

This symbol indicates safety, earth ground.

PCB工业监视和测量设备 - 中国RoHS2公布表

PCB Industrial Monitoring and Measuring Equipment - China RoHS 2 Disclosure Table

部件名称	有害物质					
	铅 (Pb)	汞 (Hg)	镉 (Cd)	六价铬 (Cr(VI))	多溴联苯 (PBB)	多溴二苯醚 (PBDE)
住房	O	O	O	O	O	O
PCB板	X	O	O	O	O	O
电气连接器	O	O	O	O	O	O
压电晶体	X	O	O	O	O	O
环氧	O	O	O	O	O	O
铁氟龙	O	O	O	O	O	O
电子	O	O	O	O	O	O
厚膜基板	O	O	X	O	O	O
电线	O	O	O	O	O	O
电缆	X	O	O	O	O	O
塑料	O	O	O	O	O	O
焊接	X	O	O	O	O	O
铜合金/黄铜	X	O	O	O	O	O

本表格依据 SJ/T 11364 的规定编制。

O： 表示该有害物质在该部件所有均质材料中的含量均在 GB/T 26572 规定的限量要求以下。

X： 表示该有害物质至少在该部件的某一均质材料中的含量超出 GB/T 26572 规定的限量要求。

铅是欧洲RoHS指令2011/65/ EU附件三和附件四目前由于允许的豁免。

CHINA RoHS COMPLIANCE

Component Name	Hazardous Substances					
	Lead (Pb)	**Mercury (Hg)**	**Cadmium (Cd)**	**Chromium VI Compounds (Cr(VI))**	**Polybrominated Biphenyls (PBB)**	**Polybrominated Diphenyl Ethers (PBDE)**
Housing	O	O	O	O	O	O
PCB Board	X	O	O	O	O	O
Electrical Connectors	O	O	O	O	O	O
Piezoelectric Crystals	X	O	O	O	O	O
Epoxy	O	O	O	O	O	O
Teflon	O	O	O	O	O	O
Electronics	O	O	O	O	O	O
Thick Film Substrate	O	O	X	O	O	O
Wires	O	O	O	O	O	O
Cables	X	O	O	O	O	O
Plastic	O	O	O	O	O	O
Solder	X	O	O	O	O	O
Copper Alloy/Brass	X	O	O	O	O	O

This table is prepared in accordance with the provisions of SJ/T 11364.

O: Indicates that said hazardous substance contained in all of the homogeneous materials for this part is below the limit requirement of GB/T 26572.

X: Indicates that said hazardous substance contained in at least one of the homogeneous materials for this part is above the limit requirement of GB/T 26572.
Lead is present due to allowed exemption in Annex III or Annex IV of the European RoHS Directive 2011/65/EU.

1.0 INTRODUCTION

Charge mode pressure sensors offer high performance for precise pressure measurements over a wide range of near-static and dynamic pressures. The sensors use piezoelectric properties to convert an applied pressure into an analogous electrical charge.

The internal design of a sensor incorporates a sensing element that provides high sensitivity over a wide range of pressures. As pressure is applied to the diaphragm of the sensor, a charge is generated in the crystals. The high-impedance electrostatic charge is then conditioned externally by either a laboratory-style charge amplifier or in-line charge converter prior to being sent to a readout or recording device.

Charge mode sensors are ideally suited for applications where wide dynamic range is needed. Such applications include compressors, engines, blast, ballistic, pneumatic, hydraulic, and fluid pressures. Enclosed is a Specification Sheet that lists the complete performance characteristics of the sensor purchased.

2.0 Series 176 High Temperature Differential Output Sensor

The Series 176 High temperature differential output sensor is a special- purpose high temperature charge mode pressure sensor designed specifically to measure low-level pressures in severe environments. The unit is most frequently used in engines, hydraulic and pneumatic devices, compressors and turbines. Ideal for sound pressure measurements, microphones and small pressure agitations, its maximum dynamic pressure range is 100 psi (689 kPa). It is acceleration compensated to minimize vibration sensitivity and is capable of a five-microsecond rise time.

This sensor measures transient or repetitive phenomena relative to the initial or average pressure level, over a wide amplitude range and a usable frequency range near DC to 10 000 Hz; the resonant frequency is 50 000 Hz. The operating temperature for the Series 176 ranges from 0°F to 1000°F. This hermetically sealed sensor contains extremely rigid compression-mode crystals with an integral acceleration compensating crystal to reduce vibration sensitivity and partially suppress internal resonance effects.

Manual Number: 30737
Revision: A
ECR Number: 24690

3.0 Installation

3.1 Overview

When choosing an installation method, the advantages and disadvantages of each method must be carefully weighed. Characteristics like location, ruggedness, amplitude range, accessibility, temperature and portability may be greatly affected by the installation configuration and technique. Often, the most important and overlooked consideration is the affect the mounting technique has on the frequency of the pressure being measured by the sensor.

Two basic mounting techniques are recommended for pressure sensors: the recess mount and the flush mount. The technique used is determined by the specifics of the individual application. See the Installation Drawing in this manual for additional details on the individual sensor series.

3.2 Recess Mount

A recess mount protects the sensor diaphragm from the effect of high flash temperature and particle impingement. This method is often selected because it can prolong sensor life and increase data integrity by reducing thermal effects. See Figure 3.1.

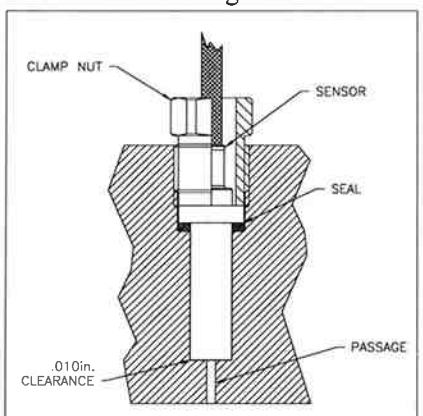

Figure 3.1 Recess Mount

When using a recess mount, note that the length of the passage may limit the frequency range of the measurement. The effect the passage has is similar to that of an under-damped second order system, with the resonant frequency determined by passage length. The passage length thus limits pressure pulse rise time and may also cause passage ringing.

The function is described by the following equation:

$$F_r = \frac{V}{4L}$$

Where: Fr = resonant frequency passage (Hz)
V = velocity of sound in air (feet/second)
L = length of column (feet)

For air at room temperature, the equation becomes:

$$F_r = \frac{3300}{L}$$

Where: L = passage length (inches)

The natural frequency and approximately fastest pressure step rise time for various length passages are shown in the following chart, using a medium of air at 77°F (25°C).

Selected Values for 77°F (25°C)

Passage length (inches)	Passage resonance (kHz)	Approx. fastest pulse rise time (microseconds)
.050	66	5
.100	33	10
.200	16.5	20
.50	6.6	50
1.0	3.3	100

Measured resonant frequencies may differ slightly from the chart values due to variations in the velocity of sound in the air from changes in temperature and pressure of the air in the passage.

To ensure diaphragm integrity, maintain .006 inches (.153 mm) of clearance ahead of the diaphragm as shown in Figure 3.1.

3.3 Flush Mount

In a flush mount installation, there is no reduced area passage from the sensor diaphragm to the test chamber. Instead, the sensor diaphragm is mounted flush with, or slightly recessed from, the inside surface of the test chamber. See Figure 3.2.

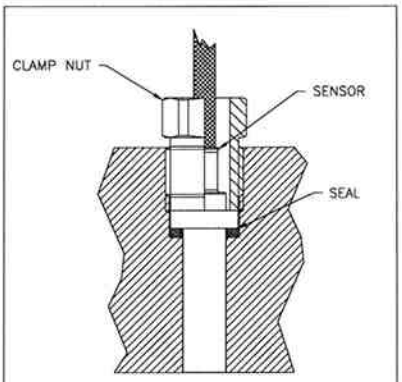

Figure 3.2 Flush Mount

If thermal transients or diaphragm impingement are concerns, use the flush mount technique only when space or frequency response considerations preclude the use of the recess mount installation.

In severe or pyrotechnic environments, sensor life may be seriously curtailed when using this mounting method.

3.4 Cabling

Care and attention to cable attachment is essential, as the reliability and accuracy of your system is no better than that of the output cable. First, check that you have ordered the correct cable type. As with sensors, no cable can satisfy all applications. Special low-noise cabling shielded twisted pair should be used with high-impedance, charge output devices.

Plug the connector on the cable into the mating connector on the sensor. Then, holding the sensor stationary, secure the connector in place by tightening down the attached cable sleeve.

Route the cable to a charge amplifier or in-line charge converter, making certain to strain relieve the sensor/cable connection and minimize motion by clamping the cable at regular intervals. Common sense must be used to avoid physical damage and minimize electrical noise. Avoid routing cables near high voltage wires. Do not route cables along floors or walkways where they may be stepped on or become contaminated. Shielded cable should have the shield grounded at one end only.

To dissipate any charge that may have accumulated in the cable, short the pins to ground prior to attachment to the charge amplifier or charge converter.

4.0 CALIBRATION

These sensors may be calibrated using static hydraulic techniques, such as dead-weight testers, or by comparison with a reference gage.

When calibrating with a laboratory-style charge amplifier, set the charge amplifier to LONG, for the time constant setting, and allow the sensor to stabilize before applying pressure. If slow drift is apparent, apply the pressure to the desired level, and immediately take a reading. Release the pressure and take another reading at zero pressure to obtain the difference between the readings at the desired present level and zero pressure. If the drift is too fast to take a reading, clean the cable connections according to the procedures out-lined in Section 7.0, Maintenance.

NOTE: Do not attempt to use a charge amplifier which, in the long time constant position, has less than a 5 000-second time constant for quasi-static calibration of charge sensors. Any drift may cause error.

A factory-supplied, NIST-traceable calibration graph is provided with each sensor, certifying its charge sensitivity in pC/psi, or when used with an in-line amplifier, in mV/psi.

5.0 Normal Operation

The high impedance signal generated by a charge output sensor is usually conditioned with a laboratory-style charge amplifier. The charge amplifier converts the high-impedance charge signal generated by the sensor into a low-impedance voltage signal. This signal may then be transmitted to a readout or recording device for analysis. See Figure 5.1 for a drawing of a typical system connection.

NOTE: When using charge-amplified systems, the noise floor of the system is dependent on the input capacitance to the charge amplifier. To minimize noise, keep the cable length between the pressure sensor and the charge amplifier to a minimum. Cable length does not affect the system sensitivity.

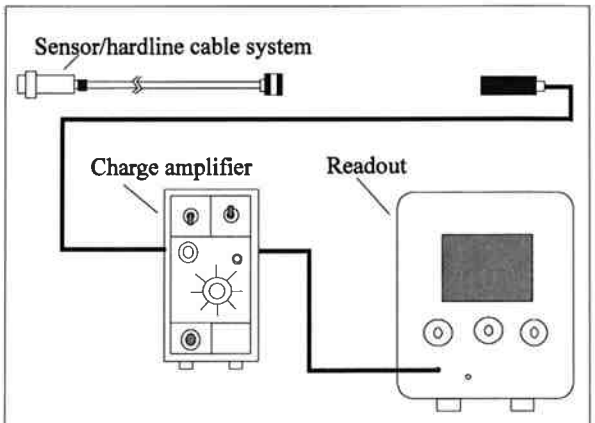

Figure 5.1 Typical System Connection

Before connecting the low-noise cable from the pressure sensor to the charge amplifier, be certain to ground the charge amplifier. This ensures that any excessive accumulated static charges across the sensor/cable combination are harmlessly discharged. If this precaution is not observed, the input FET of certain amplifiers may be destroyed. Press the ground button of the charge amplifier and adjust electrical zero if necessary.

Once system components are connected, wait a few minutes for the system to thermally stabilize. Place the switch in the OPR (operate) position and proceed with the measurement. Refer to the charge amplifier operating manual for further operating details.

For fixed sensitivity in-line charge amplifiers, the system sensitivity (mV/psi) is determined as the product of the charge amplifier sensitivity (mV/pC) and the sensor sensitivity (pC/psi).

6.0 HIGH-TEMPERATURE OPERATION

6.1 Introduction

When subjected to elevated temperature, all piezoelectric sensors/hardline cable systems exhibit decreased insulation resistance, due in part to the piezoelectric element, but due mostly to the hardline cable necessary to withstand the high temperatures. This situation can cause serious voltage offset problems in direct-coupled charge amplifiers. To solve this problem, the user must AC couple (capacitor) the charge amplifier

to the sensor/cable system. See Section 6.3, Solution to Reduced Resistance, for complete details, or use different amplifiers.

6.2 Reduced Resistance at Charge Amplifier Input

Figure 6.1 illustrates a simplified schematic of a typical direct-coupled charge amplifier where:

R_f = Feedback resistor (ohms)
R_i = Input leakage resistance (ohms)
E_o = Steady-state output voltage (volts)
e_i = Offset voltage: FET leakage (volts)
C_f = Feedback capacitor (farads)

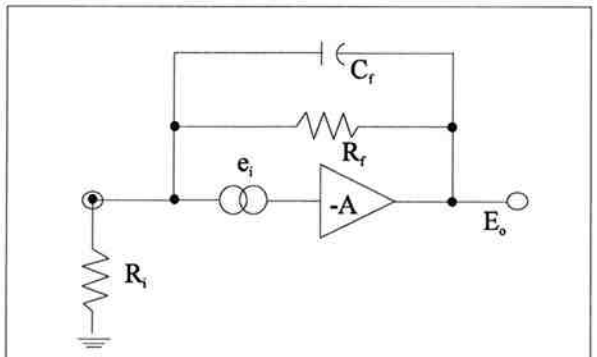

Figure 6.1 Typical Charge Amplifier Schematic

The feedback capacitor C_f comes into play only in the dynamic situation and its influence does not affect the steady-state situation. The voltage e_i is a DC offset voltage, usually very tiny (microvolts), that exists at the input gate of the MOSFET circuit. This minute leakage current exists in all real devices.

As demonstrated in Equation 1, the steady-state (DC) output voltage E_o is:

Equation 1

$$E_o = e_i\left(1+\frac{R_f}{R_i}\right)$$

This equation shows that if the input (leakage) resistance at the charge amplifier is extremely high (approaching infinity), the output DC voltage approaches e_i, usually a very tiny voltage. However, as R_i decreases, the term

$$1+\frac{R_f}{R_i}$$

increases, such that the output voltage can, with large ratios of R_f / R_i, become large enough to result in a large E_o, perhaps large enough to be outside the normal output voltage range of the charge amplifier.

Because of the feedback capacitor C_f, this output voltage change usually does not occur rapidly but rather, it manifests itself as a slow drift in the output voltage level. If R_i is low enough with respect to R_f, the voltage drift may continue until saturation of the charge amplifier occurs.

6.3 Solution to Reduced Resistance

Since the drift or offset problem is caused by a static or steady-state imbalance at the input of the charge amplifier, the solution involves blocking this steady-state effect while allowing the desired dynamic phenomena to pass. This may be accomplished by installing a series capacitor at the input of the charge amplifier, between the offending sensor (or low-impedance hardline) and the input.

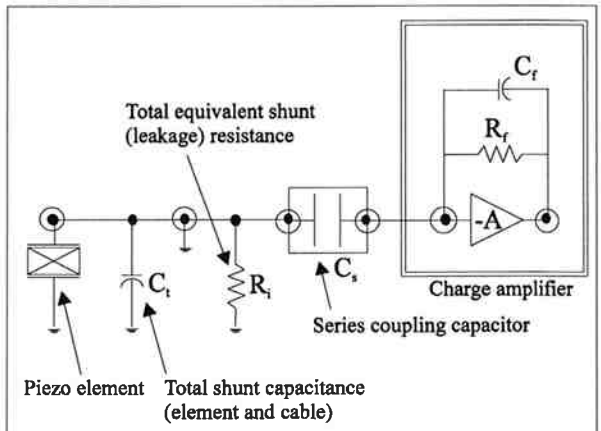

Figure 6.2 Piezoelectric System Block Diagram

Figure 6.2 illustrates a block diagram of the piezo-electric system where:

C_t = Shunt capacitor
C_s = Series blocking capacitor

With the series blocking capacitor C_s in place as shown, the dynamic charge (Q) generated by the sensor element is distributed across the two capacitors, C_t and C_s, in proportion to the size (capacitance) of each. If C_s, for example, is equal to 100 times C_t, 99% of the charge appears at the input of the charge amplifier, while 1% is

across the shunt capacitor C_t. This results in a 1% decrease in apparent sensitivity of the system.

This therefore demonstrates the importance of selecting the series blocking capacitor at least two orders of magnitude higher than the total shunt capacitance C_t across the input of the charge amplifier.

It is also important that this capacitor be of high quality, with a leakage resistance of greater that 10^{12} ohms, to avoid the DC offset discussed previously in 6.1, Introduction.

6.4 Low-Frequency Response Limitations

In a normal charge amplifier, the low-frequency response is set by the RC time constant, as established by the product of C_f and R_f. The system acts like a high-pass first order RC filter with a -3 dB frequency established by the relationship:

Equation 2

$$f_o = \frac{.16}{R_f C_f}$$

where:

f_o = -3 dB Frequency (Hz)
R_f = Feedback resistor (ohms)
C_t = Feedback capacitor (farads)

However, after the addition of the series blocking capacitor C_s, the system becomes the equivalent of two high-pass filters in series, one as previously mentioned and one comprised of series capacitor C_s and total equivalent shunt resistance R_i. This new cutoff frequency is:

Equation 3

$$f_o = \frac{.16}{R_i C_s}$$

To avoid compromise of the low-frequency response established by the charge amplifier parameters and illustrated by Equation 2, the product of R_iC_s should be several orders of magnitude higher than R_fC_f.

The approximate final system discharge time constant becomes:

Equation 4a

$$TC = \frac{1}{\frac{1}{R_i C_s} + \frac{1}{R_f C_f}} \quad \text{seconds}$$

If the input coupling time constant (R_iC_s) is very much greater than the discharge time constant of the charge amplifier (R_fC_f), Equation 4a then becomes:

Equation 4b

$$\frac{1}{R_i C_s} \Rightarrow 0 \text{ Seconds}$$

Equation 5

$$TC = R_f C_f$$

With the product R_iC_s chosen to be much greater than R_fC_f, the system discharge time constant is simply R_fC_f (seconds). The feedback parameters of the charge amplifier establish the low frequency characteristics of the system, unaffected by the degraded input resistance parameters of the test sensor and/or cable.

6.5 Other Precautions

Always remember to keep the OPR-GND switch on the charge amplifier in the GND position while connecting or disconnecting sensors, cable, or capacitor to the input connector. Stray or accumulated electrostatic charges may build to the point that they may saturate or even damage the input circuitry of the charge amplifier.

Operate the charge amplifier in the SHORT time constant while the sensor is subject to elevated or changing temperatures.

If it is not necessary to procure data during the transition from room temperature to operating temperature, place the OPR-GND switch in the GND position to keep spurious, thermally generated charges grounded.

It is prudent to momentarily switch to the GND position even during the measurement period to ensure that excess charges do not accumulate at the input of the charge amplifier.

7.0 MAINTENANCE

The only maintenance required on the pressure sensor is to keep the connector clean. If it is operating in a dirty environment, protect the cable connections with heat-shrink tubing or similar material.

In the event that the electrical connection of the pressure sensor becomes contaminated with dirt or moisture, the insulation resistance degrades. This may cause a reduction of sensitivity or excessive drifting when connected to the charge amplifier. If this happens, brush off the connector with no-residue solvent or other approved cleaning solutions. To restore insulation, bake the sensor in a vacuum oven at 250°F for about four hours. If the condition persists even after cleaning and/or baking, please contact a PCB applications engineer for further assistance. The sensor is hermetically sealed; it must therefore be returned to the factory if the aforementioned measures fail to restore performance.

Repair and Maintenance

PCB guarantees Total Customer Satisfaction through its "Lifetime Warranty Plus" on all Platinum Stock Products sold by PCB and through its limited warranties on all other PCB Stock, Standard and Special products. Due to the sophisticated nature of our sensors and associated instrumentation, **field servicing and repair is not recommended and, if attempted, will void the factory warranty**.

Beyond routine calibration and battery replacements where applicable, our products require no user maintenance. Clean electrical connectors, housings, and mounting surfaces with solutions and techniques that will not harm the material of construction. Observe caution when using liquids near devices that are not hermetically sealed. Such devices should only be wiped with a dampened cloth—never saturated or submerged.

In the event that equipment becomes damaged or ceases to operate, our Application Engineers are here to support your troubleshooting efforts 24 hours a day, 7 days a week. Call or email with model and serial number as well as a brief description of the problem.

Calibration

Routine calibration of sensors and associated instrumentation is necessary to maintain measurement accuracy. We recommend calibrating on an annual basis, after exposure to any extreme environmental influence, or prior to any critical test.

PCB Piezotronics is an ISO-9001 certified company whose calibration services are accredited by A2LA to ISO/IEC 17025, with full traceability to SI through N.I.S.T. In addition to our standard calibration services, we also offer specialized tests, including: sensitivity at elevated or cryogenic temperatures, phase response, extended high or low frequency response, extended range, leak testing, hydrostatic pressure testing, and others. For more information, contact your local PCB Piezotronics distributor, sales representative, or factory customer service representative.

Returning Equipment

If factory repair is required, our representatives will provide you with a Return Material Authorization (RMA) number, which we use to reference any information you have already provided and expedite the repair process. This number should be clearly marked on the outside of all returned package(s) and on any packing list(s) accompanying the shipment.

Contact Information

PCB Piezotronics, Inc.
3425 Walden Ave.
Depew, NY14043 USA
Toll-free: (800) 828-8840
24-hour SensorLine: (716) 684-0001
General inquiries: info@pcb.com
Repair inquiries: rma@pcb.com

For a complete list of distributors, global offices and sales representatives, visit our website, www.pcb.com.

Safety Considerations

This product is intended for use by qualified personnel who recognize shock hazards and are familiar with the precautions required to avoid injury. While our equipment is designed with user safety in mind, the protection provided by the equipment may be impaired if equipment is used in a manner not specified by this manual.

Discontinue use and contact our 24-Hour Sensorline if:

- Assistance is needed to safely operate equipment
- Damage is visible or suspected
- Equipment fails or malfunctions

For complete equipment ratings, refer to the enclosed specification sheet for your product.

Definition of Terms and Symbols

The following symbols may be used in this manual:

DANGER
Indicates an immediate hazardous situation, which, if not avoided, may result in death or serious injury.

CAUTION
Refers to hazards that could damage the instrument.

NOTE
Indicates tips, recommendations and important information. The notes simplify processes and contain additional information on particular operating steps.

The following symbols may be found on the equipment described in this manual:

This symbol on the unit indicates that high voltage may be present. Use standard safety precautions to avoid personal contact with this voltage.

This symbol on the unit indicates that the user should refer to the operating instructions located in the manual.

This symbol indicates safety, earth ground.

PCB工业监视和测量设备 - 中国RoHS2公布表

PCB Industrial Monitoring and Measuring Equipment - China RoHS 2 Disclosure Table

部件名称	有害物质					
	铅 (Pb)	汞 (Hg)	镉 (Cd)	六价铬 (Cr(VI))	多溴联苯 (PBB)	多溴二苯醚 (PBDE)
住房	O	O	O	O	O	O
PCB板	X	O	O	O	O	O
电气连接器	O	O	O	O	O	O
压电晶体	X	O	O	O	O	O
环氧	O	O	O	O	O	O
铁氟龙	O	O	O	O	O	O
电子	O	O	O	O	O	O
厚膜基板	O	O	X	O	O	O
电线	O	O	O	O	O	O
电缆	X	O	O	O	O	O
塑料	O	O	O	O	O	O
焊接	X	O	O	O	O	O
铜合金/黄铜	X	O	O	O	O	O

本表格依据 SJ/T 11364 的规定编制。

O： 表示该有害物质在该部件所有均质材料中的含量均在 GB/T 26572 规定的限量要求以下。

X： 表示该有害物质至少在该部件的某一均质材料中的含量超出 GB/T 26572 规定的限量要求。

铅是欧洲RoHS指令2011/65/ EU附件三和附件四目前由于允许的豁免。

CHINA RoHS COMPLIANCE

Component Name	Hazardous Substances					
	Lead (Pb)	**Mercury (Hg)**	**Cadmium (Cd)**	**Chromium VI Compounds (Cr(VI))**	**Polybrominated Biphenyls (PBB)**	**Polybrominated Diphenyl Ethers (PBDE)**
Housing	O	O	O	O	O	O
PCB Board	X	O	O	O	O	O
Electrical Connectors	O	O	O	O	O	O
Piezoelectric Crystals	X	O	O	O	O	O
Epoxy	O	O	O	O	O	O
Teflon	O	O	O	O	O	O
Electronics	O	O	O	O	O	O
Thick Film Substrate	O	O	X	O	O	O
Wires	O	O	O	O	O	O
Cables	X	O	O	O	O	O
Plastic	O	O	O	O	O	O
Solder	X	O	O	O	O	O
Copper Alloy/Brass	X	O	O	O	O	O

This table is prepared in accordance with the provisions of SJ/T 11364.

O: Indicates that said hazardous substance contained in all of the homogeneous materials for this part is below the limit requirement of GB/T 26572.

X: Indicates that said hazardous substance contained in at least one of the homogeneous materials for this part is above the limit requirement of GB/T 26572.
Lead is present due to allowed exemption in Annex III or Annex IV of the European RoHS Directive 2011/65/EU.

사용 지침- 176

모델(들)	176시리즈
표시	PCB Depew, NY S/N xxxxxx MM/YYYY LCIE 08 ATEX 6102 X Ex ia IIC T6 to T530ºC Ga, II 1G Ex ia IIC T6 to T660ºC Ga, II 1G Ex ia IIC T6 to T770ºC Ga, II 1G LCIE 06 ATEX 6041 X Ex ec IIC T6 to T530ºC Gc, II 3G Ex ec IIC T6 to T660ºC Gc, II 3G Ex ec IIC T6 to T770ºC Gc, II 3G IECEx LCIE 12.0025 X IECEx LCIE 12.0026 X Ui: 30V, Ii: 300 mA, Pi: 1W, Ci: 5nF, Li: 0.3mH
서비스 시작	설치 방법을 선택할 때는 각 방법의 장단점을 면밀히 검토해야 합니다. 위치, 견고성, 진폭 범위, 접근성, 온도 및 휴대성과 같은 특성은 설치 구성 및 기술에 따라 크게 영향을 받을 수 있습니다. 종종 가장 중요하지만 간과되는 고려 사항은 장착 기술이 센서가 측정하는 압력의 주파수에 미치는 영향입니다. 압력 센서에는 리세스 마운트와 플러시 마운트라는 두 가지 기본 장착 기술이 권장됩니다. 사용되는 기술은 개별 애플리케이션의 특성에 따라 결정됩니다. 개별 센서 시리즈에 대한 자세한 내용은 이 설명서의 설치 도면을 참조하십시오. 충전 출력 센서에서 생성된 높은 임피던스 신호는 일반적으로 실험실 스타일의 충전 증폭기로 조정됩니다. 전하 증폭기는 센서에서 생성된 고임피던스 전하 신호를 저임피던스 전압 신호로 변환합니다. 그런 다음 이 신호는 분석을 위해 판독 또는 기록 장치로 전송될 수 있습니다.
안전한 사용	압력 센서의 저소음 케이블을 충전 증폭기에 연결하기 전에 충전 증폭기를 접지해야 합니다. 이렇게 하면 센서/케이블 조합에 과도하게 축적된 정전하가 무해하게 방전될 수 있습니다. 이 주의 사항을 준수하지 않으면 특정 증폭기의 입력 FET가 손상될 수 있습니다. 필요한 경우 충전 증폭기의 접지 버튼을 누르고 전기적 영점을 조정합니다. 시스템 구성 요소가 연결되면 시스템이 열적으로 안정화될 때까지 몇 분간 기다립니다. 스위치를 OPR(작동) 위치에 놓고 측정을 계속 진행합니다. 자세한 작동 방법은 충전 증폭기 사용 설명서를 참조하세요.

	고온에 노출되면 모든 압전 센서/하드라인 케이블 시스템은 절연 저항이 감소하는데, 이는 부분적으로는 압전 소자 때문이지만 대부분 고온을 견디는 데 필요한 하드라인 케이블 때문이기도 합니다. 이러한 상황은 직접 결합 충전 증폭기에서 심각한 전압 오프셋 문제를 일으킬 수 있습니다. 이 문제를 해결하려면 사용자는 충전 증폭기를 센서/케이블 시스템에 AC로 연결(커패시터)해야 합니다.
조립	176 시리즈 압력 센서에는 밀폐형 니켈 합금(예: INCO) 및/또는 스테인리스 스틸 하우징(예: 304L)이 있습니다. 밀폐형 일체형 케이블 또는 일체형 커넥터(하드라인 케이블 없음)의 두 가지 버전이 있습니다. 센서는 조립이 필요하지 않습니다. 표준 장착 액세서리를 사용하여 모니터링 대상 기계에 장착하기만 하면 됩니다.
해체	마운팅에서 분리하는 것 외에는 센서를 분해할 필요가 없습니다.
유지 관리	전기 커넥터, 하우징 및 장착 표면을 물리적 구성 재료에 해를 끼치지 않는 용액과 기술을 사용하여 청소하는 것과 같은 일상적인 유지 관리는 허용됩니다.
서비스	PCB Piezotronics에서 제공하는 센서 및 관련 기기의 정교한 특성으로 인해 사용자 서비스 또는 수리는 권장되지 않으며, 시도할 경우 공장 보증이 무효화될 수 있습니다. 그러나 센서 및 관련 기기의 정기적인 보정은 측정 정확도 및 수집된 데이터에 대한 신뢰도를 높이는 데 도움이 되므로 권장됩니다.
수리	장비가 손상되거나 작동이 중단되는 경우, 수리를 위해 장비를 PCB Piezotronics에 반환해야 합니다. 사용자 서비스 또는 수리는 권장되지 않으며, 시도할 경우 공장 보증이 무효화될 수 있습니다.
설치	개요: 센서를 장착해야만 서비스를 이용할 수 있습니다. 장착 방법을 선택할 때는 각 기술의 장단점을 면밀히 고려해야 합니다. 위치, 견고성, 진폭 범위, 접근성, 온도 및 휴대성과 같은 특성은 매우 중요합니다. 그러나 가장 중요하지만 종종 간과되는 고려 사항은 장착 기술이 압력 센서의 고주파 성능에 미치는 영향입니다. 장착 방법은 다음과 같습니다: 리세스 마운트 또는 플러시 마운트. 케이블 연결: 시스템의 안정성과 정확성은 출력 케이블에 달려 있으므로 케이블 연결에 주의와 관심을 기울여야 합니다. 먼저 올바른 케이블 유형을 주문했는지 확인하세요. 센서와 마찬가지로 어떤 케이블도 모든 애플리케이션을 만족시킬 수는 없습니다. 고임피던스, 충전 출력 장치에는 특수 저잡음 차폐 연선 케이블을 사용해야 합니다. 케이블의 커넥터를 센서의 결합 커넥터에 꽂습니다. 그런 다음 센서를 고정시킨 상태에서 부착된 케이블 슬리브를 조여 커넥터를 제자리에 고정합니다. 케이블을 충전 증폭기 또는 인라인 충전 컨버터에 연결할 때 센서/케이블 연결부에 무리가 가지 않도록 주의하고 케이블을 일정한 간격으로 고정하여 움직임을 최소화하세요. 물리적 손상을 방지하고 전기적 노이즈를 최소화하기 위해 상식적인 방법을 사용해야 합니다. 고전압 전선 근처에 케이블을 배치하지 마십시오. 밟히거나 오염될 수 있는 바닥이나 통로를 따라 케이블을 배선하지 마십시오. 차폐 케이블은 한쪽 끝에만 차폐를 접지해야 합니다.
조정	센서는 밀폐된 장치이므로 사용자가 조정할 수 없습니다. 그러나 측정 정확도와 수집된 데이터에 대한 신뢰를 구축하는 데 도움이 되므로 제조업체에서 센서를 정기적으로 보정하는 것이 좋습니다.

위험 구역(압력 완화 장치용)	해당 없음 - 압력 완화 장치가 아닙니다.
교육 지침	산업용 센서는 다음 지침에 따라 숙련된 전문가가 위험 장소에 설치해야 합니다. EN/IEC 60079-14요구 사항.
안전에 대한 세부 정보보호 범주	Ex ia는 스파크의 에너지와 표면 온도를 안전한 수준으로 제한하는 "내재적 안전"입니다. Ex ec는 "안전성 향상 - 일반 방폭 수준"입니다.
엔티티 매개변수 및 한계(값)	온도 범위:-70ºC to +760ºC Ui: 30V, Ii: 300 mA, Pi: 1W, Ci: 5nF, Li: 0.3mH
특정 사용 조건	"ia" 보호 장치는 인증된 관련 본질 안전 장비에만 연결해야 하며, 이 조합은 본질 안전 규칙과 관련하여 호환되어야 합니다(위에 나열된 전기적 매개변수 참조). "ec" 보호 장치(트랜스듀서)는 전기 파라미터가 다음 값을 초과하지 않는 장비에만 연결해야 합니다.: U: 30V, I: 300 mA 작동 주변 온도:-70ºC to +760ºC 온도 분류:T6 to Ta ≤ +80ºC T5 to Ta ≤ +95ºC T4 to Ta ≤ +130ºC T3 to Ta ≤ +195ºC T2 to Ta ≤ +290ºC T1 to Ta ≤ +440ºC T530ºC to Ta ≤ +520ºC T660ºC to Ta ≤ +650ºC T770ºC to Ta ≤ +760ºC • 장치는 설치 도면에 따라 설치해야 합니다. Nº 54210. • 설치자는 트랜스듀서 장착 구조가 배리어 접지('A' 설치)와 동일한 접지 전위에 있는지 확인해야 합니다. • 센서의 금속 본체와 케이블 차폐는 시스템 접지에 안정적으로 연결되어 있어야 합니다. • 설치자는 센서가 기계적 충격을 받지 않는 방식으로 장착되도록 해야 합니다. • 설치자는 최종 사용자가 제공한 결합 커넥터가 구역 2 적용을 위해 IEC 60079-0 및 IEC 60079-7의 모든 해당 조항을 준수하는지 확인해야 합니다('ec' 설치의 경우). IEC 60079-0에 따른 최소 보호 등급 IP54가 보장되어야 합니다. 전원이 공급된 상태에서 결합 커넥터를 연결하거나 분리해서는 안 됩니다. • 경고 - 전원이 켜져 있을 때는 연결하거나 분리하지 마세요.
시스템에 장착된 도구의 필수 특성(있는 경우).	해당 없음 - 시스템에 도구가 장착되어 있지 않습니다.

도면 및 다이어그램	41428 (ATEX마킹 드로잉), 54210 (설치 가이드라인), 32141 (설명 고지ATEX ec), 32339 (요소 어셈블리), 40677 (설명 고지ATEX ia), 35030 (사용 지침), 66533 (윤곽선 그리기), 54205 (설명 고지IECEx ec), 54203 (설명 고지IECEx ia), 54209 (IECEx마킹 드로잉), 57724 (CSA c/마킹 드로잉), 60826 (KCC코리아 마킹 도면), 77518 (EAC유라시아 마킹 드로잉), 77236 (TS 대만 마킹 도면)
기타	LCIE 06 ATEX 6041 X인증서, LCIE 08 ATEX 6102 X인증서, Directive 2014/34/EU. LCIE IECEx 12.0025X인증서, LCIE IECEx 12.0026X인증서 ATEX표준: EN IEC 60079-0:2018, EN60079-11:2012; EN60079-7:2015 + A1:2018 IECEx표준: IEC60079-0 Ed 7.0, IEC60079-11: Edition 6.0, IEC60079-7:2015 + AMD1:2017 CSV

참고: 장비 또는 보호 시스템을 설명하는 문헌(예: 설명서 또는 마케팅 자료)은 안전 측면과 관련하여 지침과 모순되지 않아야 합니다.

INSTRUCTIONS FOR USE - 176 Series

Model(s)	176 Series
Markings	PCB Depew, NY S/N xxxxxx MM/YYYY LCIE 08 ATEX 6102 X Ex ia IIC T6 to T530°C Ga, II 1G Ex ia IIC T6 to T660°C Ga, II 1G Ex ia IIC T6 to T770°C Ga, II 1G LCIE 06 ATEX 6041 X Ex ec IIC T6 to T530°C Gc, II 3G Ex ec IIC T6 to T660°C Gc, II 3G Ex ec IIC T6 to T770°C Gc, II 3G IECEx LCIE 12.0025 X IECEx LCIE 12.0026 X Ui: 30V, Ii: 300 mA, Pi: 1W, Ci: 5nF, Li: 0.3mH
Putting Into Service	When choosing an installation method, the advantages and disadvantages of each method must be carefully weighed. Characteristics like location, ruggedness, amplitude range, accessibility, temperature and portability may be greatly affected by the installation configuration and technique. Often, the most important and overlooked consideration is the affect the mounting technique has on the frequency of the pressure being measured by the sensor. Two basic mounting techniques are recommended for pressure sensors: the recess mount and the flush mount. The technique used is determined by the specifics of the individual application. See the Installation Drawing in this manual for additional details on the individual sensor series. The high impedance signal generated by a charge output sensor is usually conditioned with a laboratory-style charge amplifier. The charge amplifier converts the high-impedance charge signal generated by the sensor into a low-impedance voltage signal. This signal may then be transmitted to a readout or recording device for analysis.
Safe Use	Before connecting the low-noise cable from the pressure sensor to the charge amplifier, be certain to ground the charge amplifier. This ensures that any excessive accumulated static charges across the sensor/cable combination are harmlessly discharged. If this precaution is not observed, the input FET of certain amplifiers may be destroyed. Press the ground button of the charge amplifier and adjust electrical zero if necessary. Once system components are connected, wait a few minutes for the system to thermally stabilize. Place the switch in the OPR (operate) position and proceed with the measurement. Refer to the charge amplifier operating manual for further operating details. When subjected to elevated temperature, all piezoelectric sensors/hardline cable systems exhibit decreased insulation resistance, due in part to the piezoelectric element, but due mostly to the hardline cable necessary to withstand the high temperatures. This situation can cause serious voltage offset

	problems in direct-coupled charge amplifiers. To solve this problem, the user must AC couple (capacitor) the charge amplifier to the sensor/cable system.
Assembling	The 176 Series pressure sensor have a hermetically sealed Nickle Alloy (e.g. INCO) and/or stainless steel housing (e.g. 304L). There are (2) verisons available: sealed integral cable or integral connector (no hardline cable). The sensors do not require any assembly. Only mounting to the machine being monitored using standard mounting accessories.
Dismantling	Other than removal from the mounting, there is no disassembly of the sensor required to take it out of service.
Maintenance	Routine maintenance, such as the cleaning of electrical connectors, housings, and mounting surfaces with solutions and techniques that will not harm the physical material of construction, is acceptable.
Servicing	Due to the sophisticated nature of the sensors and associated instrumentation provided by PCB Piezotronics, user servicing or repair is not recommended and, if attempted, may void the factory warranty. However, routine calibration of sensors and associated instrumentation is recommended as this helps build confidence in measurement accuracy and acquired data.
Repair	In the event that equipment becomes damaged or ceases to operate, arrangements should be made to return the equipment to PCB Piezotronics for repair. User servicing or repair is not recommended and, if attempted, may void the factory warranty.
Installation	Overview: Sensor must be mounted in order to be put into service. When choosing a mounting method, consider closely both the advantages and disadvantages of each technique. Characteristics like location, ruggedness, amplitude range, accessibility, temperature, and portability are extremely critical. However, the most important and often overlooked consideration is the effect the mounting technique has on the high-frequency performance of the pressure sensor. Mounting methods include: Recess Mount or Flush Mount. Cabling: Care and attention to cable attachment is essential, as the reliability and accuracy of your system is no better than that of the output cable. First, check that you have ordered the correct cable type. As with sensors, no cable can satisfy all applications. Special low-noise cabling shielded twisted pair should be used with high-impedance, charge output devices. Plug the connector on the cable into the mating connector on the sensor. Then, holding the sensor stationary, secure the connector in place by tightening down the attached cable sleeve. Route the cable to a charge amplifier or in-line charge converter, making certain to strain relieve the sensor/cable connection and minimize motion by clamping the cable at regular intervals. Common sense must be used to avoid physical damage and minimize electrical noise. Avoid routing cables near high voltage wires. Do not route cables along floors or walkways where they may be stepped on or become contaminated. Shielded cable should have the shield grounded at one end only.
Adjustment	The sensor is a sealed device and no user adjustments are possible. However, routine calibration of sensors by the manufacturer is recommended as this helps build confidence in measurement accuracy and acquired data.
Danger Areas (for pressure-relief devices)	N/A – not a pressure relief device.
Training Instructions	Industrial sensors must be installed in Hazardous Locations by trained professionals according to EN/IEC 60079-14 requirements.
Details on Safety of Protection Category	Ex ia is “intrinsic safety”, which limits the energy of sparks and surface temperatures to safe levels. Ex ec is “increased safety – normal level of explosion protection”.
Entity Parameters and Limits (Values)	Temperature Range: -70°C to +760°C Ui: 30V, Ii: 300 mA, Pi: 1W, Ci: 5nF, Li: 0.3mH

Specific Conditions of Use	The "ia" protected apparatus must only be connected to certified associated intrinsically safe equipment and this combination must be compatible regarding intrinsic safety rules (see electrical parameters listed above). The "ec" protected apparatus (transducer) must be only connected to equipment whose electrical parameters do not exceed the following values: U: 30V, I: 300 mA Operating ambient temperature: -70°C to +760°C Temperature Classification: T6 to Ta ≤ +80°C T5 to Ta ≤ +95°C T4 to Ta ≤ +130°C T3 to Ta ≤ +195°C T2 to Ta ≤ +290°C T1 to Ta ≤ +440°C T530°C to Ta ≤ +520°C T660°C to Ta ≤ +650°C T770°C to Ta ≤ +760°C • The apparatus must be installed per installation drawing N° 54210. • The installer shall insure that the transducer mounting structure is at the same grounding potential as the barrier ground ('ia' installations). • The metallic body of the sensor and cable shielding must be reliability connected to system earth ground. • The installer shall insure that the sensor is mounted in such a way that it is not subjected to mechanical shocks. • The installer shall insure (for 'ec' installations) that the mating connector provided by the end user shall be in accordance with all applicable clauses of IEC 60079-0 and IEC 60079-7 for a zone 2 application. A minimum degree of protection IP54 according to IEC 60079-0 shall be ensured. The mating connector shall not be connected or disconnected when energized. • WARNING – DO NOT CONNECT OR DISCONNECT WHEN ENERGIZED.
Essential Characteristics of tools fitted to the system (if any).	N/A – No tools are fitted to the system.
Drawings and Diagrams	41428 (ATEX Marking Drawing), 54210 (Installation Guidelines), 32141 (Descriptive Notice ATEX ec), 32339 (Element Assembly), 40677 (Descriptive Notice ATEX ia), 35030 (Instructions for Use), 66533 (Outline Drawing), 54205 (Descriptive Notice IECEx ec), 54203 (Descriptive Notice IECEx ia), 54209 (IECEx Marking Drawing), 57724 (CSA c/us Marking Drawing), 60826 (KCC Korea Marking Drawing), 77518 (EAC Eurasian Marking Drawing), 77236 (TS Marking Drawing)

Other	LCIE 06 ATEX 6041 X Certificate, LCIE 08 ATEX 6102 X Certificate, Directive 2014/34/EU. LCIE IECEx 12.0025X Certificate, LCIE IECEx 12.0026X Certificate ATEX Standards: EN IEC 60079-0:2018, EN60079-11:2012; EN60079-7:2015 + A1:2018 IECEx Standards: IEC60079-0 Ed 7.0, IEC60079-11: Edition 6.0, IEC60079-7:2015 + AMD1:2017 CSV

Note: Literature (such as the manual or marketing materials) describing the equipment or protective system must not contradict the instructions with regard to safety aspects.

PCB PIEZOTRONICS
AN AMPHENOL COMPANY

Model 176A31

Differential charge output pressure sensor with UHT-12™ element, 6.0 pC/psi, +1400 F

Installation and Operating Manual

For assistance with the operation of this product,
contact the PCB Piezotronics, Inc.

Toll-free: 716-684-0001
24-hour SensorLine: 716-684-0001
Fax: 716-684-0987
E-mail: info@pcb.com
Web: www.pcb.com

Total Customer Satisfaction
PCB PIEZOTRONICS

Repair and Maintenance

PCB guarantees Total Customer Satisfaction through its "Lifetime Warranty Plus" on all Platinum Stock Products sold by PCB and through its limited warranties on all other PCB Stock, Standard and Special products. Due to the sophisticated nature of our sensors and associated instrumentation, **field servicing and repair is not recommended and, if attempted, will void the factory warranty**.

Beyond routine calibration and battery replacements where applicable, our products require no user maintenance. Clean electrical connectors, housings, and mounting surfaces with solutions and techniques that will not harm the material of construction. Observe caution when using liquids near devices that are not hermetically sealed. Such devices should only be wiped with a dampened cloth—never saturated or submerged.

In the event that equipment becomes damaged or ceases to operate, our Application Engineers are here to support your troubleshooting efforts 24 hours a day, 7 days a week. Call or email with model and serial number as well as a brief description of the problem.

Calibration

Routine calibration of sensors and associated instrumentation is necessary to maintain measurement accuracy. We recommend calibrating on an annual basis, after exposure to any extreme environmental influence, or prior to any critical test.

PCB Piezotronics is an ISO-9001 certified company whose calibration services are accredited by A2LA to ISO/IEC 17025, with full traceability to SI through N.I.S.T. In addition to our standard calibration services, we also offer specialized tests, including: sensitivity at elevated or cryogenic temperatures, phase response, extended high or low frequency response, extended range, leak testing, hydrostatic pressure testing, and others. For more information, contact your local PCB Piezotronics distributor, sales representative, or factory customer service representative.

Returning Equipment

If factory repair is required, our representatives will provide you with a Return Material Authorization (RMA) number, which we use to reference any information you have already provided and expedite the repair process. This number should be clearly marked on the outside of all returned package(s) and on any packing list(s) accompanying the shipment.

Contact Information

PCB Piezotronics, Inc.
3425 Walden Ave.
Depew, NY14043 USA
Toll-free: (800) 828-8840
24-hour SensorLine: (716) 684-0001
General inquiries: info@pcb.com
Repair inquiries: rma@pcb.com

For a complete list of distributors, global offices and sales representatives, visit our website, www.pcb.com.

Safety Considerations

This product is intended for use by qualified personnel who recognize shock hazards and are familiar with the precautions required to avoid injury. While our equipment is designed with user safety in mind, the protection provided by the equipment may be impaired if equipment is used in a manner not specified by this manual.

Discontinue use and contact our 24-Hour Sensorline if:

- Assistance is needed to safely operate equipment
- Damage is visible or suspected
- Equipment fails or malfunctions

For complete equipment ratings, refer to the enclosed specification sheet for your product.

Definition of Terms and Symbols

The following symbols may be used in this manual:

DANGER
Indicates an immediate hazardous situation, which, if not avoided, may result in death or serious injury.

CAUTION
Refers to hazards that could damage the instrument.

NOTE
Indicates tips, recommendations and important information. The notes simplify processes and contain additional information on particular operating steps.

The following symbols may be found on the equipment described in this manual:

This symbol on the unit indicates that high voltage may be present. Use standard safety precautions to avoid personal contact with this voltage.

This symbol on the unit indicates that the user should refer to the operating instructions located in the manual.

This symbol indicates safety, earth ground.

PCB工业监视和测量设备 - 中国RoHS2公布表

PCB Industrial Monitoring and Measuring Equipment - China RoHS 2 Disclosure Table

部件名称	有害物质					
	铅 (Pb)	汞 (Hg)	镉 (Cd)	六价铬 (Cr(VI))	多溴联苯 (PBB)	多溴二苯醚 (PBDE)
住房	O	O	O	O	O	O
PCB板	X	O	O	O	O	O
电气连接器	O	O	O	O	O	O
压电晶体	X	O	O	O	O	O
环氧	O	O	O	O	O	O
铁氟龙	O	O	O	O	O	O
电子	O	O	O	O	O	O
厚膜基板	O	O	X	O	O	O
电线	O	O	O	O	O	O
电缆	X	O	O	O	O	O
塑料	O	O	O	O	O	O
焊接	X	O	O	O	O	O
铜合金/黄铜	X	O	O	O	O	O

本表格依据 SJ/T 11364 的规定编制。

O： 表示该有害物质在该部件所有均质材料中的含量均在 GB/T 26572 规定的限量要求以下。

X： 表示该有害物质至少在该部件的某一均质材料中的含量超出 GB/T 26572 规定的限量要求。

铅是欧洲RoHS指令2011/65/ EU附件三和附件四目前由于允许的豁免。

CHINA RoHS COMPLIANCE

Component Name	Hazardous Substances					
	Lead (Pb)	**Mercury (Hg)**	**Cadmium (Cd)**	**Chromium VI Compounds (Cr(VI))**	**Polybrominated Biphenyls (PBB)**	**Polybrominated Diphenyl Ethers (PBDE)**
Housing	O	O	O	O	O	O
PCB Board	X	O	O	O	O	O
Electrical Connectors	O	O	O	O	O	O
Piezoelectric Crystals	X	O	O	O	O	O
Epoxy	O	O	O	O	O	O
Teflon	O	O	O	O	O	O
Electronics	O	O	O	O	O	O
Thick Film Substrate	O	O	X	O	O	O
Wires	O	O	O	O	O	O
Cables	X	O	O	O	O	O
Plastic	O	O	O	O	O	O
Solder	X	O	O	O	O	O
Copper Alloy/Brass	X	O	O	O	O	O

This table is prepared in accordance with the provisions of SJ/T 11364.

O: Indicates that said hazardous substance contained in all of the homogeneous materials for this part is below the limit requirement of GB/T 26572.

X: Indicates that said hazardous substance contained in at least one of the homogeneous materials for this part is above the limit requirement of GB/T 26572.
Lead is present due to allowed exemption in Annex III or Annex IV of the European RoHS Directive 2011/65/EU.

Model Number 176A31	CHARGE OUTPUT PRESSURE SENSOR	Revision: D ECN #: 55628

Performance	ENGLISH	SI	
Sensitivity(+/- 20 %)	6 pC/psi	87 pC/bar	
Measurement Range	3,000 psi	206.8 bar	
Maximum Pressure(Total)	5,200 psi	358.5 bar	
Resonant Frequency	≥ 100 kHz	≥ 100 kHz	
Transverse Resonance	>15 kHz	>15 kHz	
Frequency Response(± 5 %)	20 kHz	20 kHz	[1][2]
Non-Linearity	≤ 1 % FS	≤ 1 % FS	[3]
Environmental			
Maximum Shock(Axial)	2,000 g pk	19,600 m/s² pk	[4]
Acceleration Sensitivity	0.0036 psi/g	.00025 bar/g	[5]
Acceleration Sensitivity	.002 psi/g	.00014 bar/g	[6]
Temperature Range(Operating)	-94 to 1,400 °F	-70 to 760 °C	
Temperature Range(Connector)	-65 to 900 °F	-53.9 to 482.2 °C	
Temperature Response	See Graph	See Graph	[6]
Hazardous Area Approval	See Manual	See Manual	
Radiation Exposure Limit(Integrated Neutron Flux)	1E10 N/cm²	1E10 N/cm²	
Radiation Exposure Limit(Integrated Gamma Flux)	1E8 rad	1E8 rad	
Electrical			
Output Polarity(Differential)	Differential	Differential	
Capacitance	70 pF	70 pF	[6]
Resistance(Pin-Pin)(Room Temp)	≥ 1E12 Ohm	≥ 1E12 Ohm	
Resistance(Pin-Case)(Room Temp)	≥ 1E12 Ohm	≥ 1E12 Ohm	
Resistance(Pin-Pin)(1400°F/760°C)	≥ 50,000 Ohm	≥ 50,000 Ohm	
Resistance(Pin-Case)(1400°F/760°C)	≥ 100,000 Ohm	≥ 100,000 Ohm	
Physical			
Sensing Element	UHT-12™	UHT-12™	
Sensing Geometry	Compression	Compression	
Housing Material	Nickel Alloy	Nickel Alloy	
Sealing	Welded Hermetic	Welded Hermetic	
Electrical Connector	7/16-27 2-PIN	7/16-27 2-PIN	
Cable Type	Hardline	Hardline	
Cable Length	3 ft	0.91 m	
Weight(with cable)	4.73 oz	134 gm	[6]

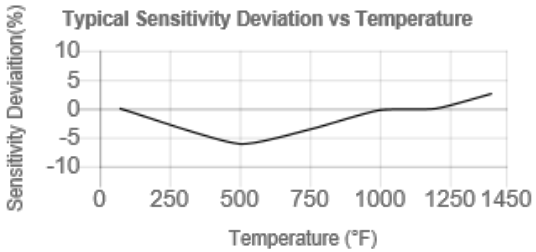

CE
UK CA [7]

All specifications are at room temperature unless otherwise specified.
In the interest of constant product improvement, we reserve the right to change specifications without notice.

OPTIONAL VERSIONS

Optional versions have identical specifications and accessories as listed for the standard model except where noted below. More than one option may be used.

NOTES:

[1]Low frequency response is determined by external signal conditioning electronics.
[2]Upper frequency response is calculated from Resonant Frequency.
[3]Zero-based, least-squares line method.
[4]Half-sine pulse duration, 1 msec
[5]Maximum.
[6]Typical.
[7]See PCB Declaration of Conformance PS058 for details.

SUPPLIED ACCESSORIES:

Model 72836-01 Silver Plated, Nickel Alloy, Seal. (3)
Model PCS-1 Calibration of dynamic pressure sensors up to 100% range

Entered: ND	Engineer: RPF	Sales: RWM	Approved: RPF	Spec Number:
Date: 04/02/2025	Date: 04/02/2025	Date: 04/02/2025	Date: 04/02/2025	72830

PCB PIEZOTRONICS
AN AMPHENOL COMPANY
Phone: 716-684-0001
Fax: 716-684-0987
E-Mail: info@pcb.com
3425 Walden Avenue, Depew, NY 14043

Repair and Maintenance

PCB guarantees Total Customer Satisfaction through its "Lifetime Warranty Plus" on all Platinum Stock Products sold by PCB and through its limited warranties on all other PCB Stock, Standard and Special products. Due to the sophisticated nature of our sensors and associated instrumentation, **field servicing and repair is not recommended and, if attempted, will void the factory warranty**.

Beyond routine calibration and battery replacements where applicable, our products require no user maintenance. Clean electrical connectors, housings, and mounting surfaces with solutions and techniques that will not harm the material of construction. Observe caution when using liquids near devices that are not hermetically sealed. Such devices should only be wiped with a dampened cloth—never saturated or submerged.

In the event that equipment becomes damaged or ceases to operate, our Application Engineers are here to support your troubleshooting efforts 24 hours a day, 7 days a week. Call or email with model and serial number as well as a brief description of the problem.

Calibration

Routine calibration of sensors and associated instrumentation is necessary to maintain measurement accuracy. We recommend calibrating on an annual basis, after exposure to any extreme environmental influence, or prior to any critical test.

PCB Piezotronics is an ISO-9001 certified company whose calibration services are accredited by A2LA to ISO/IEC 17025, with full traceability to SI through N.I.S.T. In addition to our standard calibration services, we also offer specialized tests, including: sensitivity at elevated or cryogenic temperatures, phase response, extended high or low frequency response, extended range, leak testing, hydrostatic pressure testing, and others. For more information, contact your local PCB Piezotronics distributor, sales representative, or factory customer service representative.

Returning Equipment

If factory repair is required, our representatives will provide you with a Return Material Authorization (RMA) number, which we use to reference any information you have already provided and expedite the repair process. This number should be clearly marked on the outside of all returned package(s) and on any packing list(s) accompanying the shipment.

Contact Information

PCB Piezotronics, Inc.
3425 Walden Ave.
Depew, NY14043 USA
Toll-free: (800) 828-8840
24-hour SensorLine: (716) 684-0001
General inquiries: info@pcb.com
Repair inquiries: rma@pcb.com

For a complete list of distributors, global offices and sales representatives, visit our website, www.pcb.com.

Safety Considerations

This product is intended for use by qualified personnel who recognize shock hazards and are familiar with the precautions required to avoid injury. While our equipment is designed with user safety in mind, the protection provided by the equipment may be impaired if equipment is used in a manner not specified by this manual.

Discontinue use and contact our 24-Hour Sensorline if:

- Assistance is needed to safely operate equipment
- Damage is visible or suspected
- Equipment fails or malfunctions

For complete equipment ratings, refer to the enclosed specification sheet for your product.

Definition of Terms and Symbols

The following symbols may be used in this manual:

DANGER
Indicates an immediate hazardous situation, which, if not avoided, may result in death or serious injury.

CAUTION
Refers to hazards that could damage the instrument.

NOTE
Indicates tips, recommendations and important information. The notes simplify processes and contain additional information on particular operating steps.

The following symbols may be found on the equipment described in this manual:

This symbol on the unit indicates that high voltage may be present. Use standard safety precautions to avoid personal contact with this voltage.

This symbol on the unit indicates that the user should refer to the operating instructions located in the manual.

This symbol indicates safety, earth ground.

PCB工业监视和测量设备 - 中国RoHS2公布表

PCB Industrial Monitoring and Measuring Equipment - China RoHS 2 Disclosure Table

部件名称	有害物质					
	铅 (Pb)	汞 (Hg)	镉 (Cd)	六价铬 (Cr(VI))	多溴联苯 (PBB)	多溴二苯醚 (PBDE)
住房	O	O	O	O	O	O
PCB板	X	O	O	O	O	O
电气连接器	O	O	O	O	O	O
压电晶体	X	O	O	O	O	O
环氧	O	O	O	O	O	O
铁氟龙	O	O	O	O	O	O
电子	O	O	O	O	O	O
厚膜基板	O	O	X	O	O	O
电线	O	O	O	O	O	O
电缆	X	O	O	O	O	O
塑料	O	O	O	O	O	O
焊接	X	O	O	O	O	O
铜合金/黄铜	X	O	O	O	O	O

本表格依据 SJ/T 11364 的规定编制。

O： 表示该有害物质在该部件所有均质材料中的含量均在 GB/T 26572 规定的限量要求以下。

X： 表示该有害物质至少在该部件的某一均质材料中的含量超出 GB/T 26572 规定的限量要求。

铅是欧洲RoHS指令2011/65/ EU附件三和附件四目前由于允许的豁免。

CHINA RoHS COMPLIANCE

Component Name	Hazardous Substances					
	Lead (Pb)	**Mercury (Hg)**	**Cadmium (Cd)**	**Chromium VI Compounds (Cr(VI))**	**Polybrominated Biphenyls (PBB)**	**Polybrominated Diphenyl Ethers (PBDE)**
Housing	O	O	O	O	O	O
PCB Board	X	O	O	O	O	O
Electrical Connectors	O	O	O	O	O	O
Piezoelectric Crystals	X	O	O	O	O	O
Epoxy	O	O	O	O	O	O
Teflon	O	O	O	O	O	O
Electronics	O	O	O	O	O	O
Thick Film Substrate	O	O	X	O	O	O
Wires	O	O	O	O	O	O
Cables	X	O	O	O	O	O
Plastic	O	O	O	O	O	O
Solder	X	O	O	O	O	O
Copper Alloy/Brass	X	O	O	O	O	O

This table is prepared in accordance with the provisions of SJ/T 11364.

O: Indicates that said hazardous substance contained in all of the homogeneous materials for this part is below the limit requirement of GB/T 26572.

X: Indicates that said hazardous substance contained in at least one of the homogeneous materials for this part is above the limit requirement of GB/T 26572.
Lead is present due to allowed exemption in Annex III or Annex IV of the European RoHS Directive 2011/65/EU.

PCB Piezotronics Inc. claims proprietary rights in the information disclosed hereon. Neither it nor any reproduction thereof will be disclosed to others without the written consent of PCB Piezotronics Inc.

57723

SCHEDULE DRAWING

NO MODIFICATIONS PERMITTED WITHOUT REFERENCE TO THE NOTIFIED BODY

REVISIONS

REV	DESCRIPTION	DIN
B	UPDATE TEMPERATURE CAPAPBILITIES	51929

ENTITY PARAMETER
Ui = 30V
Ii = 300 mA
Pi = 1W
C(ELEMENT)=1000pF(MAX)
C(HARDLINE)= 4000pF(MAX)
L(ELEMENT)=0µH
L(HARDLINE)= 300µH(MAX)
Ci = C(ELEMENT)+C(HARDLINE)
Li = L(ELEMENT)+L(HARDLINE)
Ci ≤ 5000 pF
Li ≤ 300 µH

HAZARDOUS LOCATION
Cl. 1, Div. 2, Gp. A,B,C,D
Cl. 1, Zn. 2, AEx nA/Ex nA IIC
T6 to T770°C
T6 to T660°C
T6 to T530°C
T6 to T360°C

T1: Ta<440°C
T2: Ta<290°C
T3: Ta<195°C
T4: Ta<130°C
T5: Ta<95°C
T6: Ta<80°C
T770°C: Ta<760°C
T660°C: Ta<650°C
T530°C: Ta<520°C
T360°C: Ta<350°C

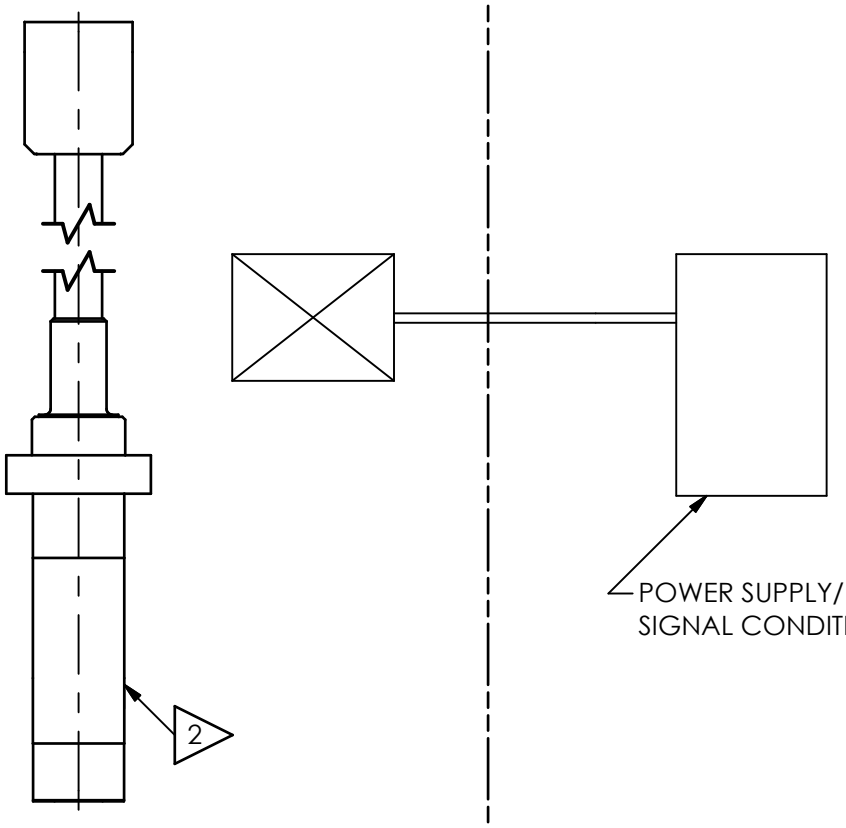

NON HAZARDOUS LOCATION

5.) FIELD WIRING MUST BE 26 AWG MINIMUM

4.) HARDLINE CABLE 200 [61 m] FEET MAX

3.) FOR CANADIAN, DIVISION 2 ZONE 2 INSTALLATION, POWER SUPPLY MUST BE CSA CERTIFIED WITH ENTITY OUTPUT PARAMETERS.
FOR U.S., DIVISION 2 AND ZONE 2 INSTALLATION, POWER SUPPLY MUST BE APPROVED BY NRTL WITH ENTITY OUTPUT PARAMETERS

2 PHYSICAL CHARACTERISTICS(DIMENSIONS,ETC) MAY NOT BE ACCURATELY REPRESENTED

1.) MAXIMUM VOLTAGE OF POWER SUPPLY/SIGNAL CONDITIONER NEVER TO EXCEED 250 Vrms

UNLESS OTHERWISE SPECIFIED
DIMENSIONS ARE IN INCHES
DECIMALS X ± .05
XX ± .01
XXX ± .005
XXXX ± .0005
ANGLES ± 2 DEGREES
FILLETS AND RADII .003 - .005

HEX DIMENSIONS ARE:
≤ .5 + .000 / - .003
> .5 + .000 / - .005

INTERNAL THREAD DEPTH MIN.
REMOVE ALL BURRS
SHARP = R.000 - R.003

DRAWN		CHECKED		ENGINEER	
NJF	07/13/23	JDM	07/13/23	RF	07/13/23

TITLE
SPECIFICATION CONTROL DRAWING

PCB PIEZOTRONICS
AN AMPHENOL COMPANY
3425 WALDEN AVE. DEPEW, NY 14043
(716) 684-0002 E-MAIL: sales@pcb.com

CODE IDENT. NO. 52681
DWG. NO. 57723
SCALE: NONE
SHEET 1 OF 2

PCB Piezotronics Inc. claims proprietary rights in the information disclosed hereon. Neither it nor any reproduction thereof will be disclosed to others without the written consent of PCB Piezotronics Inc.

57723

SCHEDULE DRAWING

NO MODIFICATIONS PERMITTED WITHOUT REFERENCE TO THE NOTIFIED BODY

REVISIONS		
REV	DESCRIPTION	DIN
	-SEE SHEET 1-	

ENTITY PARAMETER
Ui = 30V
Ii = 300 mA
Pi = 1W
C(ELEMENT)=1000pF(MAX)
C(HARDLINE)= 4000pF(MAX)
L(ELEMENT)=0µH
L(HARDLINE)= 300µH(MAX)
Ci = C(ELEMENT)+C(HARDLINE)
Li = L(ELEMENT)+L(HARDLINE)
Ci ≤ 5000 pF
Li ≤ 300 µH

HAZARDOUS LOCATION
Cl. 1, Div. 1, Gp. A,B,C,D
Cl .1, Zn. 0, AEx/Ex ia IIC
T6 to T770°C
T6 to T660°C
T6 to T530°C
T6 to T360°C

T1: Ta<440°C
T2: Ta<290°C
T3: Ta<195°C
T4: Ta<130°C
T5: Ta<95°C
T6: Ta<80°C
T770°C: Ta<760°C
T660°C: Ta<650°C
T530°C: Ta<520°C
T360°C: Ta<350°C

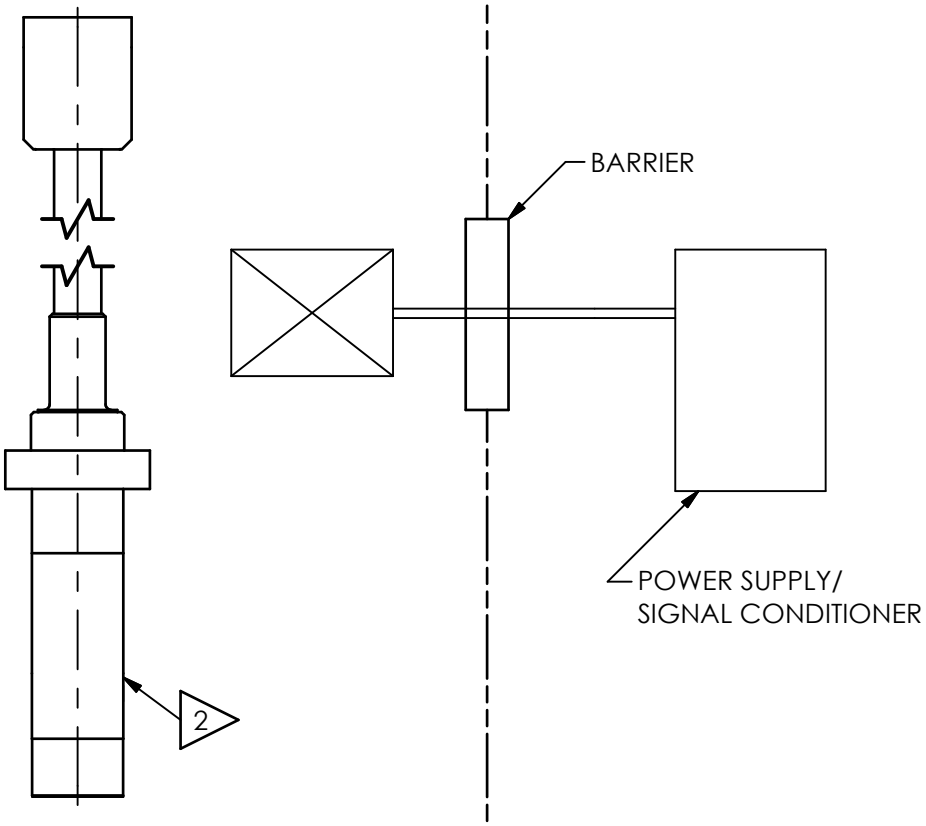

NON HAZARDOUS LOCATION

5.) FIELD WIRING MUST BE 26 AWG MINIMUM

4.) HARDLINE CABLE 200 [61 m] FEET MAX

3.) FOR CANADIAN, DIVISION 1 ZONE 0 INSTALLATION, POWER SUPPLY MUST BE CSA CERTIFIED WITH ENTITY OUTPUT PARAMETERS.
FOR U.S., DIVISION 1 AND ZONE 0 INSTALLATION, POWER SUPPLY MUST BE APPROVED BY NRTL WITH ENTITY OUTPUT PARAMETERS

2 PHYSICAL CHARACTERISTICS(DIMENSIONS,ETC) MAY NOT BE ACCURATELY REPRESENTED

1.) MAXIMUM VOLTAGE OF POWER SUPPLY/SIGNAL CONDITIONER NEVER TO EXCEED 250 Vrms

UNLESS OTHERWISE SPECIFIED
DIMENSIONS ARE IN INCHES
DECIMALS X ± .05
XX ± .01
XXX ± .005
XXXX ± .0005
ANGLES ± 2 DEGREES
FILLETS AND RADII .003 - .005

HEX DIMENSIONS ARE:
≤ .5 + .000 / - .003
> .5 + .000 / - .005

INTERNAL THREAD DEPTH MIN.
REMOVE ALL BURRS
SHARP = R.000 - R.003

DRAWN		CHECKED		ENGINEER	
NJF	07/13/23	JDM	07/13/23	RF	07/13/23

TITLE
SPECIFICATION CONTROL DRAWING

PCB PIEZOTRONICS
AN AMPHENOL COMPANY
3425 WALDEN AVE. DEPEW, NY 14043
(716) 684-0002 E-MAIL: sales@pcb.com

CODE IDENT. NO. 52681
DWG. NO. 57723
SCALE: NONE
SHEET 2 OF 2

PCB Piezotronics Inc. claims proprietary rights in the information disclosed hereon. Neither it nor any reproduction thereof will be disclosed to others without the written consent of PCB Piezotronics Inc.

54210

SCHEDULE DRAWING

NO MODIFICATIONS PERMITTED WITHOUT REFERENCE TO THE NOTIFIED BODY

REVISIONS		
REV	DESCRIPTION	DIN
C	UPDATE TEMPERATURE CAPABILITIES	51929

5.) INSTALL PER EN/IEC 60079-14 AND ALL LOCAL ELECTRICAL LAWS

4.) MODEL NUMBER 176XYY/MZZZ-AA CERTIFICATE LCIE 08 ATEX 6102X
MODEL NUMBER 176XYY/MZZZ-AA CERTIFICATE IECEx LCIE 12.0025X

3.) SHIELDS TO BE EARTHED AT BARRIER ENDS

2 BARRIER WILL BE MOUNTED IN AN ENCLOSURE THE SUITABILITY OF WHICH WILL BE DETERMINED BY LOCAL AUTHORITIES

1 ENTITY APPLICATION

BARRIER		I.S. APPARATUS
Voc/Uo	≤	V_{MAX} / UI
Isc/Io	≤	I_{MAX}/ II
Ca/Co	>	CI + C_{CABLE}
La/Lo	>	LI + L_{CABLE}
Po	≤	PI (CENELEC ONLY)

BARRIERS WITHIN THE SPECIFIED LIMITATIONS ARE PERMITTED

ENTITY PARAMETERS

OPTION 1
Ui = 30V
Ii = 300 mA
Pi = 1 W
Ci = 5 nF
Li = 300 µH

CERTIFIED BY THE APPROPRIATE APPROVAL AUTHORITY FOR CONNECTION TO THE FOLLOWING AREAS:
ZONE 0
Ex ia IIC Ga
Ta ≤ 760°C T770°C*
Ta ≤ 650°C T660°C*
Ta ≤ 520°C T530°C*
Ta ≤ 440°C T1
Ta ≤ 290°C T2
Ta ≤ 195°C T3
Ta ≤ 130°C T4
Ta ≤ 95°C T5
Ta ≤ 80°C T6
*REFERENCE ETCHING ON SENSOR FOR MAXIMUM AMBIENT TEMPERATURE AND ASSOCIATED TEMPERATURE CLASS

NOTES: Ci IS SPECIFIED AT A MAXIMUM CABLE LENGTH OF 200 FT. [61 METERS] FOR SHORTER CABLE LENGTHS, Ci IS DECREASED BY 20 pF/FT. [65.6 pF/METER.]

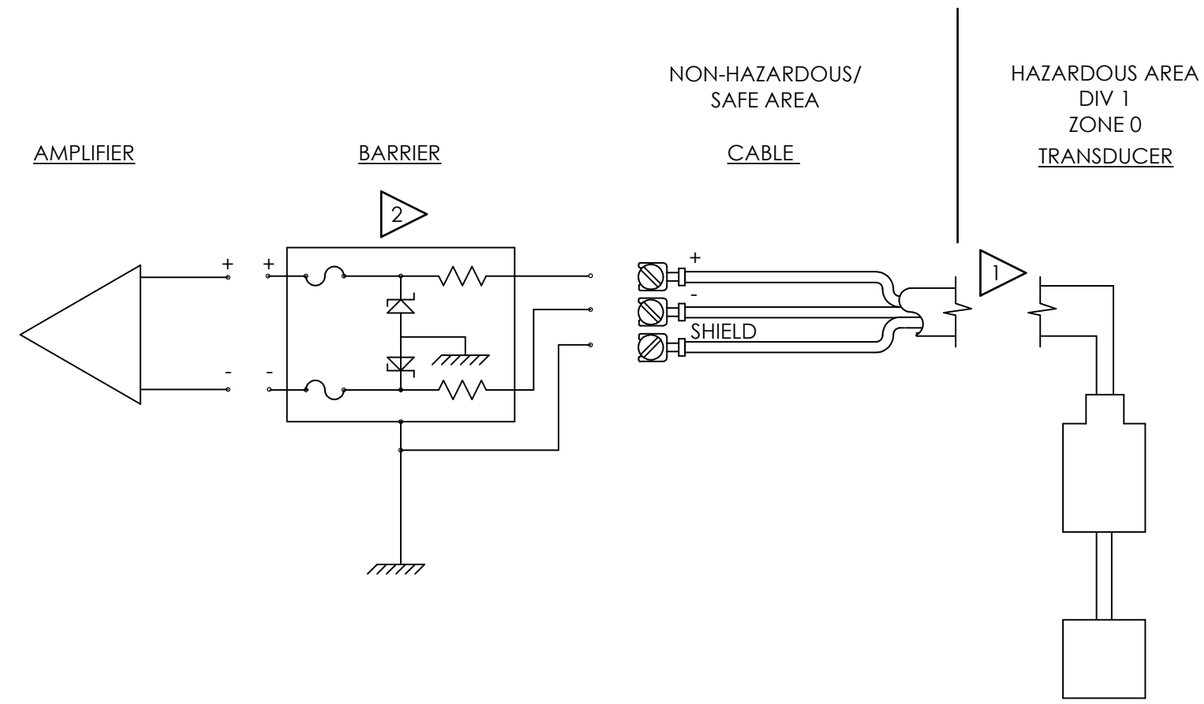

UNLESS OTHERWISE SPECIFIED
DIMENSIONS ARE IN INCHES
DECIMALS X ± .05
XX ± .01
XXX ± .005
XXXX ± .0005
ANGLES ± 2 DEGREES
FILLETS AND RADII .003 - .005
HEX DIMENSIONS ARE:
≤ .5 + .000 / - .003
> .5 + .000 / - .005
INTERNAL THREAD DEPTH MIN.
REMOVE ALL BURRS
SHARP = R.000 - R.003

CAUTION
ELECTROSTATIC DISCHARGE SENSITIVE

DRAWN		CHECKED		ENGINEER	
NJF	07/13/23	JDM	07/13/23	RF	07/13/23

TITLE
APPROVAL INTERCONNECTION

PCB PIEZOTRONICS
AN AMPHENOL COMPANY
3425 WALDEN AVE. DEPEW, NY 14043
(716) 684-0002 E-MAIL: sales@pcb.com

CODE IDENT. NO. 52681
DWG. NO. 54210
SCALE: NONE
SHEET 1 OF 2

PCB Piezotronics Inc. claims proprietary rights in the information disclosed hereon. Neither it nor any reproduction thereof will be disclosed to others without the written consent of PCB Piezotronics Inc.

54210

SCHEDULE DRAWING

NO MODIFICATIONS PERMITTED WITHOUT REFERENCE TO THE NOTIFIED BODY

REVISIONS		
REV	DESCRIPTION	DIN
	-SEE SHEET 1-	

NON-HAZARDOUS/ SAFE AREA
OR DIV 2/ ZONE 2

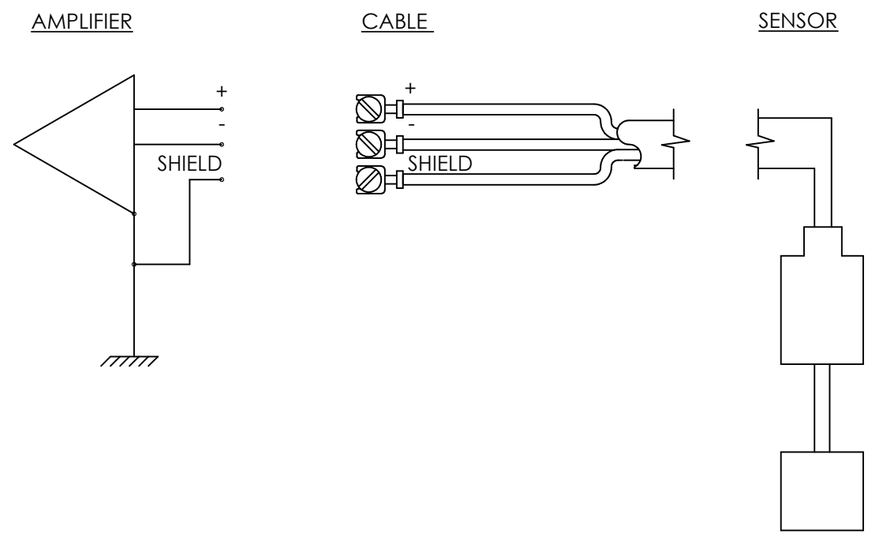

5.) INSTALL PER EN/IEC 60079-14 AND ALL LOCAL ELECTRICAL LAWS

4.) MODEL NUMBER 176XYY/MZZZ-AA CERTIFICATE LCIE 06 ATEX 6041X
MODEL NUMBER 176XYY/MZZZ-AA CERTIFICATE IECEx LCIE 12.0026X

3.) FOR ZONE 2 INSTALLATION, POWER SUPPLY MUST BE CERTIFIED WITH ENTITY OUTPUT PARAMETERS U ≤ 30V, I ≤ 300 mA, P ≤ 1W

2.) MAXIMUM VOLTAGE OF POWER SUPPLY/SIGNAL CONDITIONER NEVER TO EXCEED 250 Vrms

1.) CERTIFIED BY THE APPROPRIATE APPROVAL AUTHORITY FOR CONNECTION TO THE FOLLOWING AREAS:
ZONE 2
Ex ec IIC Gc
Ta ≤ 760°C T770°C*
Ta ≤ 650°C T660°C*
Ta ≤ 520°C T530°C*
Ta ≤ 440°C T1
Ta ≤ 290°C T2
Ta ≤ 195°C T3
Ta ≤ 130°C T4
Ta ≤ 95°C T5
Ta ≤ 80°C T6
*REFERENCE ETCHING ON SENSOR FOR MAXIMUM AMBIENT TEMPERATURE AND ASSOCIATED TEMPERATURE CLASS

DIV 2
CLASS I, GROUPS A,B,C,D

UNLESS OTHERWISE SPECIFIED
DIMENSIONS ARE IN INCHES
DECIMALS X ± .05
XX ± .01
XXX ± .005
XXXX ± .0005
ANGLES ± 2 DEGREES
FILLETS AND RADII .003 - .005
HEX DIMENSIONS ARE:
≤ .5 + .000 / - .003
> .5 + .000 / - .005
INTERNAL THREAD DEPTH MIN.
REMOVE ALL BURRS
SHARP = R.000 - R.003

CAUTION
ELECTROSTATIC DISCHARGE SENSITIVE

DRAWN		CHECKED		ENGINEER	
NJF	07/13/23	JDM	07/13/23	RF	07/13/23

TITLE
APPROVAL INTERCONNECTION

PCB PIEZOTRONICS
AN AMPHENOL COMPANY
3425 WALDEN AVE. DEPEW, NY 14043
(716) 684-0002 E-MAIL: sales@pcb.com

CODE IDENT. NO. 52681
DWG. NO. 54210
SCALE: NONE
SHEET 2 OF 2

PCB PIEZOTRONICS
AN AMPHENOL COMPANY

Model 176A31

Differential charge output pressure sensor with UHT-12™ element, 6.0 pC/psi, +1400 F

Installation and Operating Manual

For assistance with the operation of this product,
contact the PCB Piezotronics, Inc.

Toll-free: 716-684-0001
24-hour SensorLine: 716-684-0001
Fax: 716-684-0987
E-mail: info@pcb.com
Web: www.pcb.com

Total Customer Satisfaction
PCB PIEZOTRONICS

Repair and Maintenance

PCB guarantees Total Customer Satisfaction through its "Lifetime Warranty Plus" on all Platinum Stock Products sold by PCB and through its limited warranties on all other PCB Stock, Standard and Special products. Due to the sophisticated nature of our sensors and associated instrumentation, **field servicing and repair is not recommended and, if attempted, will void the factory warranty**.

Beyond routine calibration and battery replacements where applicable, our products require no user maintenance. Clean electrical connectors, housings, and mounting surfaces with solutions and techniques that will not harm the material of construction. Observe caution when using liquids near devices that are not hermetically sealed. Such devices should only be wiped with a dampened cloth—never saturated or submerged.

In the event that equipment becomes damaged or ceases to operate, our Application Engineers are here to support your troubleshooting efforts 24 hours a day, 7 days a week. Call or email with model and serial number as well as a brief description of the problem.

Calibration

Routine calibration of sensors and associated instrumentation is necessary to maintain measurement accuracy. We recommend calibrating on an annual basis, after exposure to any extreme environmental influence, or prior to any critical test.

PCB Piezotronics is an ISO-9001 certified company whose calibration services are accredited by A2LA to ISO/IEC 17025, with full traceability to SI through N.I.S.T. In addition to our standard calibration services, we also offer specialized tests, including: sensitivity at elevated or cryogenic temperatures, phase response, extended high or low frequency response, extended range, leak testing, hydrostatic pressure testing, and others. For more information, contact your local PCB Piezotronics distributor, sales representative, or factory customer service representative.

Returning Equipment

If factory repair is required, our representatives will provide you with a Return Material Authorization (RMA) number, which we use to reference any information you have already provided and expedite the repair process. This number should be clearly marked on the outside of all returned package(s) and on any packing list(s) accompanying the shipment.

Contact Information

PCB Piezotronics, Inc.
3425 Walden Ave.
Depew, NY14043 USA
Toll-free: (800) 828-8840
24-hour SensorLine: (716) 684-0001
General inquiries: info@pcb.com
Repair inquiries: rma@pcb.com

For a complete list of distributors, global offices and sales representatives, visit our website, www.pcb.com.

Safety Considerations

This product is intended for use by qualified personnel who recognize shock hazards and are familiar with the precautions required to avoid injury. While our equipment is designed with user safety in mind, the protection provided by the equipment may be impaired if equipment is used in a manner not specified by this manual.

Discontinue use and contact our 24-Hour Sensorline if:

- Assistance is needed to safely operate equipment
- Damage is visible or suspected
- Equipment fails or malfunctions

For complete equipment ratings, refer to the enclosed specification sheet for your product.

Definition of Terms and Symbols

The following symbols may be used in this manual:

DANGER
Indicates an immediate hazardous situation, which, if not avoided, may result in death or serious injury.

CAUTION
Refers to hazards that could damage the instrument.

NOTE
Indicates tips, recommendations and important information. The notes simplify processes and contain additional information on particular operating steps.

The following symbols may be found on the equipment described in this manual:

This symbol on the unit indicates that high voltage may be present. Use standard safety precautions to avoid personal contact with this voltage.

This symbol on the unit indicates that the user should refer to the operating instructions located in the manual.

This symbol indicates safety, earth ground.

PCB工业监视和测量设备 - 中国RoHS2公布表

PCB Industrial Monitoring and Measuring Equipment - China RoHS 2 Disclosure Table

部件名称	有害物质					
	铅 (Pb)	汞 (Hg)	镉 (Cd)	六价铬 (Cr(VI))	多溴联苯 (PBB)	多溴二苯醚 (PBDE)
住房	O	O	O	O	O	O
PCB板	X	O	O	O	O	O
电气连接器	O	O	O	O	O	O
压电晶体	X	O	O	O	O	O
环氧	O	O	O	O	O	O
铁氟龙	O	O	O	O	O	O
电子	O	O	O	O	O	O
厚膜基板	O	O	X	O	O	O
电线	O	O	O	O	O	O
电缆	X	O	O	O	O	O
塑料	O	O	O	O	O	O
焊接	X	O	O	O	O	O
铜合金/黄铜	X	O	O	O	O	O

本表格依据 SJ/T 11364 的规定编制。

O： 表示该有害物质在该部件所有均质材料中的含量均在 GB/T 26572 规定的限量要求以下。

X： 表示该有害物质至少在该部件的某一均质材料中的含量超出 GB/T 26572 规定的限量要求。

铅是欧洲RoHS指令2011/65/ EU附件三和附件四目前由于允许的豁免。

CHINA RoHS COMPLIANCE

Component Name	Hazardous Substances					
	Lead (Pb)	**Mercury (Hg)**	**Cadmium (Cd)**	**Chromium VI Compounds (Cr(VI))**	**Polybrominated Biphenyls (PBB)**	**Polybrominated Diphenyl Ethers (PBDE)**
Housing	O	O	O	O	O	O
PCB Board	X	O	O	O	O	O
Electrical Connectors	O	O	O	O	O	O
Piezoelectric Crystals	X	O	O	O	O	O
Epoxy	O	O	O	O	O	O
Teflon	O	O	O	O	O	O
Electronics	O	O	O	O	O	O
Thick Film Substrate	O	O	X	O	O	O
Wires	O	O	O	O	O	O
Cables	X	O	O	O	O	O
Plastic	O	O	O	O	O	O
Solder	X	O	O	O	O	O
Copper Alloy/Brass	X	O	O	O	O	O

This table is prepared in accordance with the provisions of SJ/T 11364.

O: Indicates that said hazardous substance contained in all of the homogeneous materials for this part is below the limit requirement of GB/T 26572.

X: Indicates that said hazardous substance contained in at least one of the homogeneous materials for this part is above the limit requirement of GB/T 26572.
Lead is present due to allowed exemption in Annex III or Annex IV of the European RoHS Directive 2011/65/EU.

PCB Piezotronics Inc. claims proprietary rights in the information disclosed hereon. Neither it nor any reproduction thereof will be disclosed to others without the written consent of PCB Piezotronics Inc.

72831

REVISIONS		
REV	DESCRIPTION	DIN
B	UPDATED FLUSH MOUNT DETAILS	54371

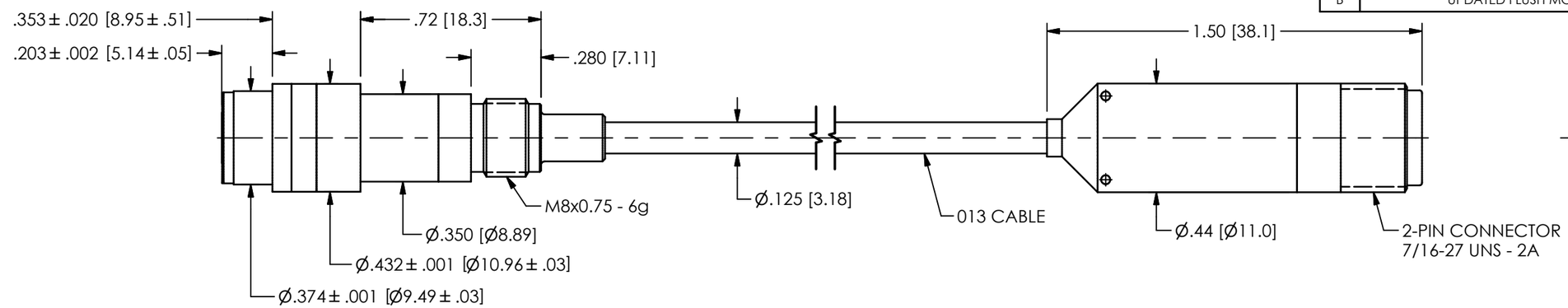

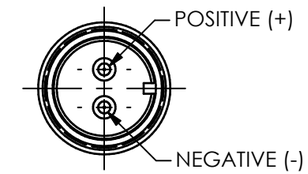

FLUSH MOUNT

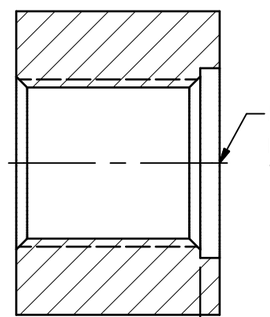

MOUNTING HOLE PREPARATION

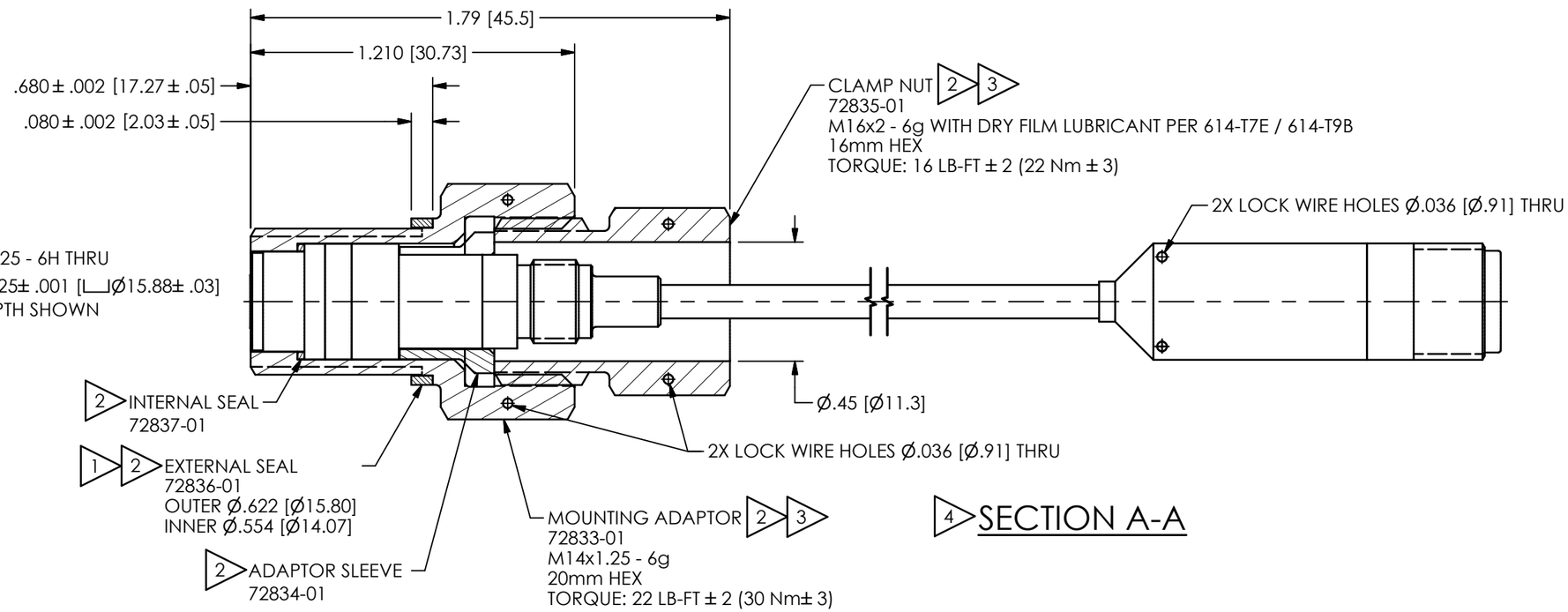

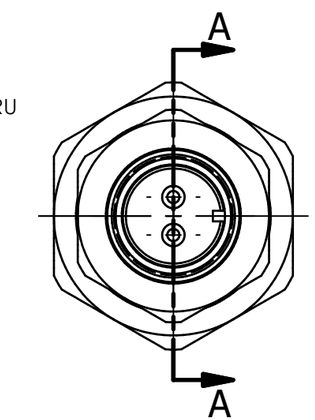

4 SECTION A-A

4 MOUNTING ADAPTOR 72832-01 SHOWN IN THIS VIEW

3 IF SENSOR IS DIS-ASSEMBLED: MUST TORQUE MOUNTING ADAPTOR FIRST, CLAMP NUT LAST, THEN RE-VERIFY MOUNTING TORQUE

2 72832-01 CONSISTS OF THESE COMPONENTS: SENSOR IS PRE-ASSEMBLED AND TORQUED IN MOUNTING ADAPTOR SEAL LEAK TEST VERIFIES BOTH SENSOR AND MOUNTING ADAPTOR AT MAXIMUM PRESSURE

1 MATING MACHINE SURFACES TO HAVE A SURFACE ROUGHNESS OF Ra 16 [.4] √C

UNLESS OTHERWISE SPECIFIED TOLERANCES ARE:	
DIMENSIONS IN INCHES DECIMALS XX ±.01 XXX ±.005 ANGLES ± 2 DEGREES	DIMENSIONS IN MILLIMETERS [IN BRACKETS] DECIMALS X ± 0.3 XX ± 0.13 ANGLES ± 2 DEGREES
CABLE TOLERANCES IN ENGLISH 1"≤ LENGTH < 1' = +1"/ - 0 1'≤ LENGTH < 5' = +2"/ - 0 5'≤ LENGTH < 100' = +6"/ - 0 100'≤ LENGTH = +1'/ - 0	CABLE TOLERANCES IN METRIC 2.54cm ≤ LENGTH < 30.5cm = +2.54cm/ - 0 30.5cm ≤ LENGTH < 1.5m = +5.1cm/ - 0 1.5m ≤ LENGTH < 30.5m = +15.2cm/ - 0 30.5m ≤ LENGTH = +30.5cm/ - 0
FILLETS AND RADII .003 - .005	FILLETS AND RADII 0.07 - 0.13

DRAWN		CHECKED		ENGINEER	
NJF	11/02/23	JDM	11/02/23	EDB	11/02/23

TITLE

INSTALLATION DRAWING
HIGH TEMPERATURE
PRESSURE SENSOR

PCB PIEZOTRONICS
AN AMPHENOL COMPANY
3425 WALDEN AVE. DEPEW, NY 14043
(716) 684-0001 E-MAIL: sales@pcb.com

CODE IDENT. NO.	DWG. NO.	
52681	72831	
SCALE: 2X	SHEET 1 OF 1	

Repair and Maintenance

PCB guarantees Total Customer Satisfaction through its "Lifetime Warranty Plus" on all Platinum Stock Products sold by PCB and through its limited warranties on all other PCB Stock, Standard and Special products. Due to the sophisticated nature of our sensors and associated instrumentation, **field servicing and repair is not recommended and, if attempted, will void the factory warranty**.

Beyond routine calibration and battery replacements where applicable, our products require no user maintenance. Clean electrical connectors, housings, and mounting surfaces with solutions and techniques that will not harm the material of construction. Observe caution when using liquids near devices that are not hermetically sealed. Such devices should only be wiped with a dampened cloth—never saturated or submerged.

In the event that equipment becomes damaged or ceases to operate, our Application Engineers are here to support your troubleshooting efforts 24 hours a day, 7 days a week. Call or email with model and serial number as well as a brief description of the problem.

Calibration

Routine calibration of sensors and associated instrumentation is necessary to maintain measurement accuracy. We recommend calibrating on an annual basis, after exposure to any extreme environmental influence, or prior to any critical test.

PCB Piezotronics is an ISO-9001 certified company whose calibration services are accredited by A2LA to ISO/IEC 17025, with full traceability to SI through N.I.S.T. In addition to our standard calibration services, we also offer specialized tests, including: sensitivity at elevated or cryogenic temperatures, phase response, extended high or low frequency response, extended range, leak testing, hydrostatic pressure testing, and others. For more information, contact your local PCB Piezotronics distributor, sales representative, or factory customer service representative.

Returning Equipment

If factory repair is required, our representatives will provide you with a Return Material Authorization (RMA) number, which we use to reference any information you have already provided and expedite the repair process. This number should be clearly marked on the outside of all returned package(s) and on any packing list(s) accompanying the shipment.

Contact Information

PCB Piezotronics, Inc.
3425 Walden Ave.
Depew, NY14043 USA
Toll-free: (800) 828-8840
24-hour SensorLine: (716) 684-0001
General inquiries: info@pcb.com
Repair inquiries: rma@pcb.com

For a complete list of distributors, global offices and sales representatives, visit our website, www.pcb.com.

Safety Considerations

This product is intended for use by qualified personnel who recognize shock hazards and are familiar with the precautions required to avoid injury. While our equipment is designed with user safety in mind, the protection provided by the equipment may be impaired if equipment is used in a manner not specified by this manual.

Discontinue use and contact our 24-Hour Sensorline if:

- Assistance is needed to safely operate equipment
- Damage is visible or suspected
- Equipment fails or malfunctions

For complete equipment ratings, refer to the enclosed specification sheet for your product.

Definition of Terms and Symbols

The following symbols may be used in this manual:

DANGER
Indicates an immediate hazardous situation, which, if not avoided, may result in death or serious injury.

CAUTION
Refers to hazards that could damage the instrument.

NOTE
Indicates tips, recommendations and important information. The notes simplify processes and contain additional information on particular operating steps.

The following symbols may be found on the equipment described in this manual:

This symbol on the unit indicates that high voltage may be present. Use standard safety precautions to avoid personal contact with this voltage.

This symbol on the unit indicates that the user should refer to the operating instructions located in the manual.

This symbol indicates safety, earth ground.

PCB工业监视和测量设备 - 中国RoHS2公布表

PCB Industrial Monitoring and Measuring Equipment - China RoHS 2 Disclosure Table

部件名称	有害物质					
	铅 (Pb)	汞 (Hg)	镉 (Cd)	六价铬 (Cr(VI))	多溴联苯 (PBB)	多溴二苯醚 (PBDE)
住房	O	O	O	O	O	O
PCB板	X	O	O	O	O	O
电气连接器	O	O	O	O	O	O
压电晶体	X	O	O	O	O	O
环氧	O	O	O	O	O	O
铁氟龙	O	O	O	O	O	O
电子	O	O	O	O	O	O
厚膜基板	O	O	X	O	O	O
电线	O	O	O	O	O	O
电缆	X	O	O	O	O	O
塑料	O	O	O	O	O	O
焊接	X	O	O	O	O	O
铜合金/黄铜	X	O	O	O	O	O

本表格依据 SJ/T 11364 的规定编制。

O： 表示该有害物质在该部件所有均质材料中的含量均在 GB/T 26572 规定的限量要求以下。

X： 表示该有害物质至少在该部件的某一均质材料中的含量超出 GB/T 26572 规定的限量要求。

铅是欧洲RoHS指令2011/65/ EU附件三和附件四目前由于允许的豁免。

CHINA RoHS COMPLIANCE

Component Name	Hazardous Substances					
	Lead (Pb)	**Mercury (Hg)**	**Cadmium (Cd)**	**Chromium VI Compounds (Cr(VI))**	**Polybrominated Biphenyls (PBB)**	**Polybrominated Diphenyl Ethers (PBDE)**
Housing	O	O	O	O	O	O
PCB Board	X	O	O	O	O	O
Electrical Connectors	O	O	O	O	O	O
Piezoelectric Crystals	X	O	O	O	O	O
Epoxy	O	O	O	O	O	O
Teflon	O	O	O	O	O	O
Electronics	O	O	O	O	O	O
Thick Film Substrate	O	O	X	O	O	O
Wires	O	O	O	O	O	O
Cables	X	O	O	O	O	O
Plastic	O	O	O	O	O	O
Solder	X	O	O	O	O	O
Copper Alloy/Brass	X	O	O	O	O	O

This table is prepared in accordance with the provisions of SJ/T 11364.

O: Indicates that said hazardous substance contained in all of the homogeneous materials for this part is below the limit requirement of GB/T 26572.

X: Indicates that said hazardous substance contained in at least one of the homogeneous materials for this part is above the limit requirement of GB/T 26572.
Lead is present due to allowed exemption in Annex III or Annex IV of the European RoHS Directive 2011/65/EU.

Certificate of Compliance

Certificate: 1742175 **Master Contract:** 184981

Project: 80131422 **Date Issued:** May 19, 2023

Issued To: **PCB Piezotronics**
3425 Walden Ave
Depew, New York, 14043
United States

Attention: Wendy Willard

The products listed below are eligible to bear the CSA Mark shown with adjacent indicators 'C' and 'US' for Canada and US or with adjacent indicator 'US' for US only or without either indicator for Canada only

C US

Issued by: R Papiah

PRODUCTS

CLASS 2258 03 - PROCESS CONTROL EQUIPMENT - Intrinsically Safe and Non-Incendive Systems - For Hazardous Locations
CLASS 2258 83 - PROCESS CONTROL EQUIPMENT - Intrinsically Safe and Non-Incendive Systems - For Hazardous Locations - CERTIFIED TO U.S. STANDARDS

Ex nA IIC TX:
AEx nA IIC TX:
Class I, Division 2, Groups A, B, C, D:

Models 176XYY/MZZZ-AA High Temperature Pressure Transducer; non-incendive with entity parameters as shown below; must be installed per installation drawing 57723; temperature code as shown below.

Entity Parameters	Temperature Code
Ui / Vmax = 30V Ii/Imax =300 mA Pi / Pmax = 1W Ci = 5nF Li = 300µH	T6 (-70°C to 80°C) T5 (-70°C to 95°C) T4 (-70°C to 130°C) T3 (-70°C to 195°C) T2 (-70°C to 290°C) T1 (-70°C to 440°C) T530 (-70°C to 530°C) T660 (-70°C to 650°C) T770 (-70°C to 760°C)

© 2018 CSA Group. All rights reserved.

Notes:
1. For Canadian Installations, sensor case must be bonded to ground according to Section 18-182 of the CEC, Part 1.
2. For US Installations, sensor case must be bonded to ground according to Article 501.16 of the NEC.

CLASS 2258 04 - PROCESS CONTROL EQUIPMENT - Intrinsically Safe Entity - For Hazardous Locations
CLASS 2258 84 - PROCESS CONTROL EQUIPMENT - Intrinsically Safe Entity - For Hazardous Locations - CERTIFIED TO U.S. STANDARDS

Ex ia IIC TX:
AEx ia IIC TX:
Class I, Division 1, Groups A, B, C, D:

Models 176XYY/MZZZ-AA High Temperature Pressure Transducer; intrinsically safe with entity parameters as shown below; must be installed as per installation drawing 57723; temperature code as shown below;

Entity Parameters	Temperature Code
Ui / Vmax = 30V Ii/ Imax =300mA Pi / Pmax = 1W Ci = 5nF Li = 300μH	T6 (-70°C to 80°C) T5 (-70°C to 95°C) T4 (-70°C to 130°C) T3 (-70°C to 195°C) T2 (-70°C to 290°C) T1 (-70°C to 440°C) T530 (-70°C to 530°C) T660 (-70°C to 650°C) T770 (-70°C to 760°C)

Notes:
1. For Canadian Installations, sensor case must be bonded to ground according to Section 18-182 of the CEC, Part 1.
2. For US Installations, sensor case must be bonded to ground according to Article 501.16 of the NEC.

© 2018 CSA Group. All rights reserved.

Certificate: 1742175
Project: 80131422

Master Contract: 184981
Date Issued: May 19, 2023

APPLICABLE REQUIREMENTS

CAN/CSA-C22.2 No. 0-M91 (R2001)	General Requirements – Canadian Electrical Code, Part II
CAN/CSA C22.2 No. 61010-1-12, UPD1: 2015, UPD2: 2016, AMD1: 2018	Safety Requirements for Electrical Equipment for Measurement, Control, and Laboratory Use, Part 1: General Requirements
UL 61010-1, 3rd edition (2012), AMD1: 2018	Safety Requirements for Electrical Equipment for Measurement, Control, and Laboratory Use, Part 1: General Requirements
C22.2 No. 213-M1987 (R2008)	Non-Incendive Electrical Equipment for Use in Class I, Division 2 Hazardous Locations
CAN/CSA-E60079-0:02	Electrical apparatus for explosive gas atmospheres - Part 11: Intrinsic Safety "i"
CAN/CSA-C22.2 No. 60079-11:14 (R2018)	Explosive Atmospheres – Part 11: Equipment protection by intrinsic safety "i"
CAN/CSA-E60079-15:02	Electrical apparatus for explosive gas atmospheres - Part 15: Type of Protection "n"
UL 913 (8th Ed.)	Intrinsically Safe Apparatus and Associated Apparatus for Use in Class I, II and III, Division 1, Hazardous Locations
FM Std. No. 3600-1998	Electrical Equipment for Use in Hazardous (Classified) Locations – General Requirements
FM Std. No. 3611-1999	Nonincendive Electrical Equipment for Use in Class I and II, Division 2, and Class III, Divisions 1 and 2, Hazardous (Classified) Locations
ANSI/UL 60079-15:02	Electrical Apparatus for Explosive Gas Atmospheres - Part 15: Type of Protection "n".
ANSI/UL 60079-0:13	Electrical Apparatus for Explosive Gas Atmospheres - Part 0: General Requirements
ANSI/UL 60079-11:13	Electrical apparatus for Explosive Gas Atmospheres - Part 11: Intrinsic Safety "i"

© 2018 CSA Group. All rights reserved.

MARKINGS

The manufacturer is required to apply the following markings:

- Products shall be marked with the markings specified by the particular product standard.
- Products certified for Canada shall have all Caution and Warning markings in both English and French.

Additional bilingual markings not covered by the product standard(s) may be required by the Authorities Having Jurisdiction. It is the responsibility of the manufacturer to provide and apply these additional markings, where applicable, in accordance with the requirements of those authorities.

The products listed are eligible to bear the CSA Mark shown with adjacent indicators 'C' and 'US' for Canada and US (indicating that products have been manufactured to the requirements of both Canadian and U.S. Standards) or with adjacent indicator 'US' for US only or without either indicator for Canada only.

Markings are etched directly into the Sensor enclosure body. The following marking details appear:

- CSA Monogram with C-US indicator.
- Submittor Identification
- Certificate reference CSA 06.1742175
- Model Number
- Serial Number, Date Code or Month and Year of Manufacture
- Electrical Rating
- Hazardous Location Designation
- The term 'Class I, Zone 0' adjacent to the AEx ia IIC T6...T770 marking
- The term 'Class I, Zone 2' adjacent to the AEx nA IIC T6...T770 marking
- Ambient temperature range as per product listing

Notes:

Products certified under Class C225803, C225804, C225883, C225884 have been certified under CSA's ISO/IEC 17065 accreditation with the Standards Council of Canada (SCC). www.scc.ca

© 2018 CSA Group. All rights reserved.

CSA GROUP™

Supplement to Certificate of Compliance

Certificate: 1742175 **Master Contract:** 184981

The products listed, including the latest revision described below, are eligible to be marked in accordance with the referenced Certificate.

Product Certification History

Project	Date	Description
80131422	2023-05-19	Update to report 1742175 for Model 176XYY/MZZZ-AA, High Temperature Pressure Transducer to include a higher temperature range from the current 660° to 770°C, Increased Ii/ Imax from 100 mA to 300 mA. Reduced inductance from Li≤500μH to Li≤300μH; Update of enclosure material specification: materials do not contain by mass more than 10% in total Magnesium, Titanium and Zirconium and 7.5% in total magnesium. Upgrade to the latest ordinary locations standards.
70068556	2016-05-06	Temperature Range Modification 176 Series
70028573	2015-06-22	Update to the Report 1742175 for Model 176XYY/MZZ construction with alternative type of piezo crystal and additional temperature ranges.
2692514	2014-05-23	Update to add Class I, Div. 1, Groups A, B, C, and D and AEx/Ex ia IIC T4...T1 markings.
1742175	2006-05-04	Model 176Mxx High Temperature Pressure Transducer for Div. 2/Zone 2 Hazardous Locations.

© 2018 CSA Group. All rights reserved.

ATTESTATION D'EXAMEN UE DE TYPE

EU TYPE EXAMINATION CERTIFICATE

1 **Version : 07** **LCIE 08 ATEX 6102 X** **Issue : 07**

Directive 2014/34/UE

2 Appareil ou Système de Protection destiné à être utilisé en Atmosphères Explosibles

Directive 2014/34/EU

Equipment or Protective System Intended for use in Potentially Explosive Atmospheres

3 Produit :
Capteur de pression haute température

Product :
High temperature pressure transducer

Type: 176XYY/MZZZ-AA series

4 Fabricant : Manufacturer :

PCB Piezotronics Inc.

5 Adresse : Address :

3425 Walden Avenue
Depew, New York 14043 USA

6 Ce produit et ses variantes éventuelles acceptées sont décrits dans l'annexe de la présente attestation et dans les documents descriptifs cités en référence.

This product and any acceptable variations thereto are specified in the schedule to this certificate and the documents therein referred to.

7 Le LCIE, Organisme Notifié sous la référence 0081 conformément à l'article 17 de la directive 2014/34/UE du Parlement européen et du Conseil du 26 février 2014, certifie que ce produit est conforme aux Exigences Essentielles de Sécurité et de Santé pour la conception et la construction de produits destinés à être utilisés en atmosphères explosibles, données dans l'annexe II de la Directive.
Accréditation Cofrac Certification de Produits et Services, n°5-0014. Portée disponible sur www.cofrac.fr.

LCIE, Notified Body number 0081 in accordance with article 17 of the Directive 2014/34/EU of the European Parliament and the Council of 26 February 2014 certifies that product has been found to comply with the Essential Health and Safety Requirements relating to the design and construction of products intended for use in potentially explosive atmospheres, given in Annex II to the Directive.
Cofrac Accreditation Product and Services Certification n°5-0014. Scope available on www.cofrac.fr.

Les résultats des vérifications et essais figurent dans le(s) rapport(s) confidentiel(s) N° :

The examination and test results are recorded in confidential report(s) N°:

84489/575164, 88358/579638/1, 114468-627759-1, 124381-650043, 134494-670162, 142170-686669, 14474569-777120-M3

8 Le respect des Exigences Essentielles de Sécurité et de Santé est assuré par la conformité à :

Compliance with the Essential Health and Safety Requirements has been assured by compliance with :

EN IEC 60079-0:2018
EN 60079-11:2012

9 Le signe « X » lorsqu'il est placé à la suite du numéro de l'attestation, indique que cet appareil est soumis aux conditions particulières d'utilisation, mentionnées dans l'annexe de cette attestation.

If the sign "X" is placed after the certificate number, it indicates that the product is subject to the Specific Conditions of Use specified in the schedule to this certificate.

10 Cette Attestation d'Examen UE de Type concerne uniquement la conception et la construction du produit spécifié.
Des exigences supplémentaires de la directive sont applicables pour la fabrication et la fourniture du produit. Ces dernières ne sont pas couvertes par la présente attestation.

This EU Type Examination Certificate relates only to the design and construction of the specified product.
Further requirements of the Directive apply to the manufacturing process and supply of this product. These are not covered by this certificate.

11 Le marquage du produit est mentionné dans l'annexe de cette attestation.

The marking of the product is specified in the schedule to this certificate.

Fontenay-aux-Roses, le 13 décembre 2022

Responsable de Certification
Certification Officer
Julien Gauthier

LABORATOIRE CENTRAL DES INDUSTRIES ELECTRIQUES
S.A.S au capital de 15.745.984 €
RCS Nanterre B 408 363 174
33 avenue du Général Leclerc
F - 92266 FONTENAY AUX ROSES

Seul le texte en français peut engager la responsabilité du LCIE. Ce document ne peut être reproduit que dans son intégralité, sans aucune modification. Il est établi en accord avec le référentiel de certification ATEX du LCIE. *The LCIE's liability applies only on the French text. This document may only be reproduced in its entirety and without any change. It is issued in accordance with LCIE's ATEX Certification Rules.*

LCIE
Laboratoire Central des Industries Electriques
Une société de Bureau Veritas
33 Avenue du Général Leclerc
92260 Fontenay-aux-Roses
FRANCE
WWW.LCIE.FR

12 DESCRIPTION DU PRODUIT

Le capteur est composé d'une enveloppe métallique hermétiquement scellée contenant un ensemble piézo-cristal et connecté à un câble intégré (longueur maximale 61m).

DETAIL DE LA GAMME

X = A à Z code de la famille
YY = 01 à 99, pour indiquer le montage, le câblage, le diaphragme ou le connecteur
M = option pour indiquer la longueur métrique du câble
ZZZ = 001 à 999, en option pour indiquer la longueur métrique (≤ 61m) ou en pied (≤ 200 pieds) du câble
AA = 01 à 99, en option pour indiquer la longueur du câble en pouces ou en centimètres

CARACTERISTIQUES

U_i : 30V, I_i : 300mA, P_i : 1W, C_i : 5nF, L_i : 0,3mH

MARQUAGE

Le marquage du produit doit comprendre :

PCB Piezotronics Inc.
Adresse :…
Type : 176XYY/MZZZ-AA series
N° de fabrication : …
Année de fabrication : …
Ex II 1 G
Ex ia IIC T6…T770°C* Ga
*Voir classement en température
LCIE 08 ATEX 6102 X
U_i : 30V, I_i : 300mA, P_i : 1W, C_i : 5nF, L_i : 0,3mH

Marquage réduit :
PCB
Type : 176XYY/MZZZ-AA series
N° de fabrication : …
Année de fabrication : …
Ex II 1 G
Ex ia IIC T6…T770°C* Ga
LCIE 08 ATEX 6102 X

L'appareil doit également comporter le marquage normalement prévu par les normes de construction qui le concernent sous la responsabilité du fabricant.

13 CONDITIONS PARTICULIERES D'UTILISATION

a. L'appareil ne peut être raccordé qu'à un matériel certifié de sécurité intrinsèque. Cette association doit être conforme vis-à-vis de la sécurité intrinsèque (voir les paramètres électriques au paragraphe 12).

DESCRIPTION OF PRODUCT

The sensor is made of a hermetically sealed metal housing containing only a piezo-crystal assembly connected to an integral cable (maximum length 61m).

RANGE DETAILS

X = A to Z for family code
YY = 01 to 99 for indicate mounting, diaphragm, cabling or connector variations
M = optional to indicate metric cable length
ZZZ = 001 to 999 is optional to indicate cable length in feet (≤ 200 feet) or meters (≤ 61m)
AA = 01 to 99 is optional to indicate fractional length of cable in inches or centimeters

RATINGS

U_i : 30V, I_i : 300mA, P_i : 1W, C_i : 5nF, L_i : 0,3mH

MARKING

The marking of the product shall include the following :

PCB Piezotronics Inc.
Address : …..
Type : 176XYY/MZZZ-AA series
Serial number : …
Year of construction : …
Ex II 1 G
Ex ia IIC T6…T770°C* Ga
*See Temperature classification
LCIE 08 ATEX 6102 X
U_i : 30V, I_i : 300mA, P_i : 1W, C_i : 5nF, L_i : 0,3mH

Reduced marking :
PCB
Type : 176XYY/MZZZ-AA series
Serial number : …
Year of construction : …
Ex II 1 G
Ex ia IIC T6…T770°C* Ga
LCIE 08 ATEX 6102 X

The equipment shall also bear the usual marking required by the product standards applying to such equipment under the manufacturer responsibility.

SPECIFIC CONDITIONS OF USE

The apparatus can be only connected to certified intrinsically safe equipment. This combination must be compatible as regards intrinsic safety rules (see electric parameters clause 12).

Seul le texte en français peut engager la responsabilité du LCIE. Ce document ne peut être reproduit que dans son intégralité, sans aucune modification. Il est établi en accord avec le référentiel de certification ATEX du LCIE. *The LCIE's liability applies only on the French text. This document may only be reproduced in its entirety and without any change. It is issued in accordance with LCIE's ATEX Certification Rules.*

LCIE
Laboratoire Central des Industries Electriques
Une société de Bureau Veritas
33 Avenue du Général Leclerc
92260 Fontenay-aux-Roses
FRANCE
WWW.LCIE.FR

b. Le montage du produit dans une installation doit être effectué de telle sorte que le corps métallique du capteur et le blindage du câble soient reliés de manière fiable à la terre du système.

The mounting of the apparatus into an installation must be carried out in such a way that metallic body of the sensor and cable shield are reliably connected to the system earth.

c. L'équipement doit être monté de manière à ce qu'il ne soit pas soumis à des chocs mécaniques sur le capteur.

The equipment must be mounted in such a way that it is not subjected to mechanical shocks on the sensor.

Classement en température / *Temperature classification*	Température ambiante / *Ambient temperature*
T6	-70°C ≤ T_{amb} ≤ +80°C
T5	-70°C ≤ T_{amb} ≤ +95°C
T4	-70°C ≤ T_{amb} ≤ +130°C
T3	-70°C ≤ T_{amb} ≤ +195°C
T2	-70°C ≤ T_{amb} ≤ +290°C
T1	-70°C ≤ T_{amb} ≤ +440°C
T530°C	-70°C ≤ T_{amb} ≤ +520°C
T660°C	-70°C ≤ T_{amb} ≤ +650°C
T770°C	-70°C ≤ Tamb ≤ +760°C

14 EXIGENCES ESSENTIELLES DE SANTE ET DE SECURITE

Couvertes par les normes listées au point 8.

ESSENTIAL HEALTH AND SAFETY REQUIREMENTS

Covered by standards listed at 8.

15 DOCUMENTS DESCRIPTIFS

DESCRIPTIVE DOCUMENTS

N°	Description	Reference	Rev.	Date	Page(s)
1.	Dossier technique/*Technical file*	40678	E	2022/07/29	-
2.	Notice/*Instruction*	35030	J	-	-

16 INFORMATIONS COMPLEMENTAIRES

Essais individuels

Néant.

ADDITIONAL INFORMATIONS

Routine tests

None.

17 DETAILS DES MODIFICATIONS DE L'ATTESTATION

Version 00 : 03/09/2008 — Evaluation initiale selon les normes EN 60079-0:2004 et EN 60079-11:2007.

Version 01: 27/02/2009 — Mise à jour des documents, correction du type en français : 176 séries

Version 02: 07/07/2012
- Mise à jour normative selon les normes EN 60079-0:2009 et EN 60079-11:2012.
- Modification des paramètres électriques d'alimentation.

Version 03: 31/08/2014
- Mise à jour normative selon la norme EN 60079-0:2012,
- Modification de la classification de température, définition des modèles certifiés.

DETAILS OF CERTIFICATE CHANGES

Issue 00: 2008/09/03 — Initial assessment according to EN 60079-0:2004 and EN 60079-11:2007 standards.

Issue 01: 2009/02/27 — Update of documents, correction of the type in French : 176 series.

Issue 02: 2012/07/07
- Normative update according to EN 60079-0:2009 and EN 60079-11:2012 standards.
- Modification of the electrical supply parameters

Issue 03: 2014/08/31
- Normative update according to EN 60079-0:2012 standard,
- Modification temperature classification, definition of certified models.

Seul le texte en français peut engager la responsabilité du LCIE. Ce document ne peut être reproduit que dans son intégralité, sans aucune modification. Il est établi en accord avec le référentiel de certification ATEX du LCIE. *The LCIE's liability applies only on the French text. This document may only be reproduced in its entirety and without any change. It is issued in accordance with LCIE's ATEX Certification Rules.*

LCIE
Laboratoire Central des Industries Electriques
Une société de Bureau Veritas
33 Avenue du Général Leclerc
92260 Fontenay-aux-Roses
FRANCE
WWW.LCIE.FR

Version 04: 29/07/2015	- Mise à jour normative selon la norme EN 60079-0:2012 + A11:2013. - Modification de l'élément piézo-électrique. - Modification du marquage pour la classification de température. - Modification de la classification de la température dans la clause «Conditions spéciales pour une utilisation sûre ».	Issue 04: 2015/07/29	- Normative update according to EN 60079-0:2012 + A11:2013 standard. - Modification of the piezoelectric element. - Modification of the marking for the temperature classification. - Modification of the temperature classification in the clause "Special conditions for safe use".
Version 05: 21/02/2017	Mise à jour de la température ambiante inférieure de 0°C à -70°C.	Issue 05: 2017/02/21	Update of the lower ambient temperature from 0°C to -70°C.
Version 06: 09/11/2022	- Extension de la gamme de température de la série 176 pour inclure jusqu'à Ta ≤ 760°C T770°C. - Ajout d'une variante avec option de connecteur intégré (au lieu du câble). - Mise à jour normative selon la norme EN IEC 60079-0:2018. - Modification des paramètres SI.	Issue 06: 2022/11/09	- Expansion of the Temperature range of the 176 Series to include up to Ta ≤ 760°C T770°C. - Adding a variation with integral connector option (instead of cable). - Normative update according to EN IEC 60079-0:2018. - Modification of IS parameters.
Version 07 :	Correction éditoriale (numéro de l'attestation).	Issue 07:	Editorial correction (certificate number).

Seul le texte en français peut engager la responsabilité du LCIE. Ce document ne peut être reproduit que dans son intégralité, sans aucune modification. Il est établi en accord avec le référentiel de certification ATEX du LCIE. *The LCIE's liability applies only on the French text. This document may only be reproduced in its entirety and without any change. It is issued in accordance with LCIE's ATEX Certification Rules.*

LCIE
Laboratoire Central des Industries Electriques
Une société de Bureau Veritas
33 Avenue du Général Leclerc
92260 Fontenay-aux-Roses
FRANCE
WWW.LCIE.FR

제2019-018373-01-1호

안 전 인 증 서

PCB Piezotronics Inc.
3425 Walden Avenue, Depew, New York 14043, USA

위 사업장에서 제조하는 아래의 품목이 「산업안전보건법」 제34조 및 같은 법 시행규칙 제58조의4제4항에 따른 안전인증 심사 결과 안전·보건기준에 적합하므로 안전인증표시의 사용을 인증합니다.

품 목

High Temperature Pressure Transducer

형식 · 모델(용량 · 등급) / 인증번호

176***/****-**(Ex ia IIC T6...T530 ℃,T660 ℃) / 15-KA4BO-0201X

인 증 기 준

고용노동부고시 제2018-53호

인 증 조 건

1. 제조공장
·본 인증서는 '3425 Walden Avenue, Depew, New York 14043, USA'에서 생산하는 제품에 한함.

2. 제품개요
·압전소자를 이용하여, 높은 온도의 가스터빈 등에 대한 상태점검 및 분석을 위한 압력을 측정하는 센서
·본질안전을 위한 전기적 파라미터
$-U_i$ = 30 V, I_i = 300 mA, P_i = 1 W, C_i = 5 nF, L_i = 0.5 mH
·사용주위온도: -70 ℃ ≤ T_a ≤ +80 ℃ (T6) / +95 ℃ (T5) / +130 ℃ (T4) / +195 ℃ (T3) / +290 ℃ (T2) / +440 ℃ (T1) / +520 ℃ (T530 ℃) / +650 ℃ (T660 ℃)

3. 인증범위: 본 인증서는 아래의 형식번호에 한하여 유효함
·176***/****-**
*: 방폭 성능에 영향을 주지 않는 제품코드임.

4. 안전한 사용을 위한 조건
·관련 IECEx 인증서(IECEx LCIE 12.0025X issue No.3) 3페이지 SPECIFIC CONDITIONS OF USE참조

5. 인증(변경)사항
·1차 변경(2019.04.29.): 기존 제2015-021904-01호에서 부품 변경 및 온도 등급 변경에 따른 최신 인증서 갱신으로 인한 문서변경

6. 그 밖의 사항
·사용자 설명서 참조
·안전인증품의 품질관리, 확인심사 수검, 변경사항 신고 등 인증 받은 자의 의무 준수
·본 안전인증서는 반드시 관련 IECEx 인증서(IECEx LCIE 12.0025X issue No.3)와 함께 사용

2015 년 6 월 5 일

한국산업기술시험원장

(08389) 서울시 구로구 디지털로 26길 87(구로동) http://www.ktl.re.kr
(52852) 경상남도 진주시 충의로 10(충무공동)

EU Declaration of Conformity PS058

In Accordance with ISO/IEC 17050

Manufacturer:
PCB Piezotronics, Inc.
3425 Walden Avenue
Depew, New York 14043
USA

Authorized European Representative:
PCB Piezotronics GmbH
Porschestrasse 20-30
41836 Hückelhoven
Germany

Certifies that type of equipment: **Charge Output Sensor(s)**

Whose Product Models Include: **176 Series**

This declaration is applicable to all Sensor(s) of the above series, which have the CE, & (EX) ATEX mark on their data sheets and where those data sheets refer to this declaration of conformity. The data sheets for all model numbers referenced above, which include the CE & (EX) ATEX mark on such data sheets and refer to this Declaration of Conformity are hereby incorporated by reference into this Declaration.

Conform to the following EU Directive(s) when installed per product documentation:	2014/34/EU 2011/65/EU w/2015/863/EU	ATEX Directive RoHS Directive

Harmonized Standards to which Conformity is Declared:

Harmonized Standards	EN 60079-0:2018 EN 60079-11:2012 EN 60079-7:2015/A1:2018 EN 63000:2016+AMD1:2022	Explosive atmospheres - Part 0: Equipment - General requirements Explosive atmospheres - Part 11: Equipment protection by intrinsic safety, “ia” Explosive atmospheres - Part 7: Equipment protection by increased safety non-arcing "ec" Technical documentation for the assessment of electrical and electronic products with respect to the restriction of hazardous substances
EC Type Examination	ATEX Certifications EN 60079-0:2018 EN 60079-11:2012	**LCIE 08 ATEX 6102 X** Ex ia IIC T1 thru T6 Ga, II 1 G Ex ia IIC T530°C Ga, II 1 G Ex ia IIC T660^{0}C Ga, II 1 G Ex ia IIC T770°C Ga, II 1 G Ui : 30V, Ii : 300mA, Pi : 1W, Ci : 5nF, Li: 0,3mH
Voluntary Certification	Voluntary Type Examination Certificate EN IEC 60079-0:2018 EN 60079-7:2015 + A1:2018	**LCIE 06 ATEX 6041 X** Ex ec IIC T1 thru T6, II 3 G Ex ec IIC T530°C Gc, II 3 G Ex ec IIC T660°C Gc, II 3 G Ex ec IIC T770^{0}C Gc, II 3 G
Other International Certifications **Other International Certifications**	**IECEx Certifications** IEC 60079-0:2017 IEC 60079-11:2011 IEC 60079-0:2017 IEC 60079-7:2017	**IECEx LCIE 12.0025 X** Ex ia IIC T1 thru T6 Ga Ex ia IIC T530°C Ga Ex ia IIC T660°C Ga Ex ia IIC T770^{0}C Ga Ui : 30V, Ii : 300mA, Pi : 1W, Ci : 5nF, Li: 0,3mH **IECEx LCIE 12.0026 X** Ex ec IIC T1 thru T6 Gc Ex ec IIC T530°C Gc Ex ec IIC T660°C Gc Ex ec IIC T770^{0}C Gc

Notified Body Name		Laboratoire Central des Industries Electriques (**0081**)
Notified Body's Address		**FONTENAY-AUX-ROSES (Head Office)** 33, avenue du Général Leclerc FR- 92260 Fontenay-aux-Roses Tel. : + 33 1 40 95 60 60 Fax : + 33 1 40 95 86 56

I, the undersigned, hereby declare that the equipment specified above conforms to the above Directive(s) Standard(s)

Place: Depew, NY **Date:** 03/31/2025

Signature:	
Name:	Lance Pellens
Title:	Director – Quality Assurance

UK Declaration of Conformity PS058UK

In Accordance with ISO/IEC 17050

Manufacturer:
PCB Piezotronics, Inc.
3425 Walden Avenue
Depew, New York 14043
USA

Authorized UK Representative:
PCB Piezotronics Ltd
Business and Technology Center
Bessemer Drive
Stevenage
Hertfordshire, SG1 2DX
United Kingdom

Certifies that type of equipment: **Charge Output Sensor(s)**

Whose Product Models Include: **176 Series**

This declaration is applicable to all microphones of the above series which have the UKCA mark on their data sheets and where those data sheets refer to this declaration of conformity. The data sheets for all ICP® model numbers referenced above, which include the UKCA mark on such data sheets and refer to this Declaration of Conformity are hereby incorporated by reference into this Declaration.

Conform to the following EU Directive(s) when installed per product documentation: 2011/65/EU w/2015/863/EU RoHS Directive

Designated Standards to which Conformity is Declared:

Designated Standards	BS EN 63000:2016+AMD1:2022	Technical documentation for the assessment of electrical and electronic products with respect to the restriction of hazardous substances

I, the undersigned, hereby declare that the equipment specified above conforms to the above Directive(s) Standard(s)

Place: Depew, NY **Date:** 03/31/2025

Signature:

Name: Lance Pellens

Title: Director - Quality Assurance

Government of India
Ministry of Commerce & Industry
Petroleum & Explosives Safety Organisation (PESO)
5th Floor, A-Block, CGO Complex, Seminary Hills,
Nagpur - 440006

E-mail : **explosives@explosives.gov.in**
Phone/Fax No : **0712 -2510248, Fax-2510577**

Approval No : A/P/HQ/DL/104/5924 (P586103) Dated : **14/02/2024**

To,

M/s. M/s PCB Piezontronics, Inc.,
3425 Walden Avenue Depew ,NY
14043-2495
U.S.A

Sub : Approval of Intrinsically Safe Type Electrical Equipment. under Petroleum Rules 2002- Regarding.

Sir(s),

Please refer to your letter No. **OIN1554325** dated **31/01/2024** on the subject.

The following Ex electrical equipment(s) manufactured by you according to **IEC 60079-0 : 2017, IEC 60079-11 : 2011,** standards and covered under **LCIE** Test reports mentioned below is/are approved for use in **Zone 1** of Gas **IIC** hazardous areas coming under the the Petroleum Rules, 2002 administered by this Organization.

Sr. No	Description	Safety Protection	Equipment reference Number	Test Agency			Drawing no
				Name	Certificate No.	Certificate Date	
1	High temperature pressure transducer - Type: 176XYY/MZZZ-AA series.	Ex ia IIC T6...T770 C Ga	**P586103/1**	LCIE	IECEx LCIE 12.0025X Issue 6	11/09/2023	As per test report

This Approval is granted subject to observance of the following conditions:-

1)The design and construction of the equipment shall be strictly in accordance with description, condition and drawings as mentioned in the LCIE Test Reports referred to above.

2)The equipment shall be used only with approved type of accessories and associated apparatus.

3)Each equipment shall be marked either by raised lettering cast integrally or by plate attached permanently to the main structure to indicate conspicuously:-
(a) Name of the manufacturer
(b) Name and number by which the equipment is identified.
(c) Number & date of the test report of the LCIE applicable to the equipment.
(d) Equipment reference number of this letter by which use of apparatus is approved.
(e) Protection level.

4) A certificate to the effect that the equipment has been manufactured strictly in accordance with the drawing referred to in the LCIE Test report and is identical with the one tested and certified at LCIE shall be furnished with each equipment.
5) The customer shall be supplied with a copy of this letter, an extract of the conditions and maintenence schedule, if any, recommended by LCIE in their test reports and copy of instructions booklet detailing operation & maintenance of the equipment so as to maintain its Flame Proof characterestics.
6) The After sales service and maintanance of subject equipment shall be looked after by your representative M/s Conformity India International Private Limited, A 33 Second Floor Mayapuri Industrial Area Phase - I

This approval also covers the permissible variations as approved under the LCIE test reports referred above. This approval is liable to be cancelled if any of the conditions of the approval is violated or not complied with . The approval may also be amended or withdrawn at any time, if considered necessary in the interest of safety.

The field performance report from actual users/your customers of the subject equipment may please be collected and furnished to this office for verification and record on annual basis.
The Approval is Valid upto **31/12/2028**

Yours faithfully,

(K. Thiagarajan)
Jt. Chief Controller of Explosives
For Chief Controller of Explosives
Nagpur

Copy to :
1. Jt. Chief Controller of Explosives, North Circle, FARIDABAD
2. M/s Conformity India International Private Limited,A 33 Second Floor Mayapuri Industrial Area Phase - I

for Chief Controller of Explosives
Nagpur

(For more information regarding status,fees and other details please visit our website http://peso.gov.in)

This is System Generated document. Signature is not required.

Digitally signed by K THIAGARAJAN
Reason: Approval No. : A/P/HQ/DL/104/5924
Location:Nagpur [P586103]
Date:14-02-2024 12:28:14 PM

ATTESTATION D'EXAMEN DE TYPE
TYPE EXAMINATION CERTIFICATE

1 **Version : 06** **LCIE 06 ATEX 6041 X** **Issue : 06**

	Directive 2014/34/UE	**Directive 2014/34/EU**
2	Appareil ou Système de Protection destiné à être utilisé en Atmosphères Explosibles	Equipment or Protective System Intended for use in Potentially Explosive Atmospheres
3	Produit : **Capteurs de pression haute température**	Product : **High temperature pressure transducers**

Type: 176XYY/MZZZ-AA series

4	Fabricant :	Manufacturer :
	PCB Piezotronics Inc.	
5	Adresse :	Address :
	3425 Walden Avenue Depew, New York 14043 États-Unis d'Amérique	
6	Ce produit et ses variantes éventuelles acceptées sont décrits dans l'annexe de la présente attestation et dans les documents descriptifs cités en référence.	This product and any acceptable variation thereto are specified in the schedule to this certificate and the documents therein referred to.
7	Le LCIE certifie que ce produit est conforme aux Exigences Essentielles de Sécurité et de Santé pour la conception et la construction de produits destinés à être utilisés en atmosphères explosibles, données dans l'annexe II de la Directive. Les résultats des vérifications et essais figurent dans le(s) rapport(s) confidentiel(s) N° :	LCIE certifies that product has been found to comply with the Essential Health and Safety Requirements relating to the design and construction of products intended for use in potentially explosive atmospheres, given in Annex II to the Directive. The examination and test results are recorded in confidential report(s) N°:
	60046217/546313 ; 88358/579638/2 ; 114468-627759-2 ; 124381-650043 ; 134494-670162 ; 142170-686669 ; 14475067-777126	
8	Le respect des Exigences Essentielles de Sécurité et de Santé est assuré par la conformité à :	Compliance with the Essential Health and Safety Requirements has been assured by compliance with :
	EN IEC 60079-0:2018 EN 60079-7:2015 + A1:2018	
9	Le signe « X » lorsqu'il est placé à la suite du numéro de l'attestation, indique que cet appareil est soumis aux conditions particulières d'utilisation, mentionnées dans l'annexe de cette attestation.	If the sign "X" is placed after the certificate number, it indicates that the product is subject to the Specific Conditions of Use specified in the schedule to this certificate.
10	Cette Attestation d'Examen de Type concerne uniquement la conception et la construction du produit spécifié. Des exigences supplémentaires de la directive sont applicables pour la fabrication et la fourniture du produit. Ces dernières ne sont pas couvertes par la présente attestation.	This Type Examination Certificate relates only to the design and construction of the specified product. Further requirements of the Directive apply to the manufacturing process and supply of this product. These are not covered by this certificate.
11	Le marquage du produit est mentionné dans l'annexe de cette attestation.	The marking of the product is specified in the schedule to this certificate.

Fontenay-aux-Roses, le 11 janvier 2023

Responsable de Certification
Certification Officer
Julien Gauthier

LABORATOIRE CENTRAL DES INDUSTRIES ELECTRIQUES
S.A.S au capital de 15.745.984 €
RCS Nanterre B 408 363 174
33 avenue du Général Leclerc
F - 92266 FONTENAY AUX ROSES

Seul le texte en français peut engager la responsabilité du LCIE. Ce document ne peut être reproduit que dans son intégralité, sans aucune modification. Il est établi en accord avec le référentiel de certification ATEX du LCIE. *The LCIE's liability applies only on the French text. This document may only be reproduced in its entirety and without any change. It is issued in accordance with LCIE's ATEX Certification Rules.*

LCIE
Laboratoire Central des Industries Electriques
Une société de Bureau Veritas
33 Avenue du Général Leclerc
92260 Fontenay-aux-Roses
FRANCE
WWW.LCIE.FR

1 **Version : 06** **LCIE 06 ATEX 6041 X** **Issue : 06**

12 DESCRIPTION DU PRODUIT

Le capteur de pression se compose d'un boîtier métallique hermétiquement scellé, contenant uniquement un élément de détection piézoélectrique, avec un câble intégré équipé d'un connecteur à son extrémité.
Le capteur peut également être fabriqué avec un connecteur intégré (sans câble) soudé sur le boîtier du capteur.

DESCRIPTION OF PRODUCT

The pressure transducer consists of a metallic hermetically sealed housing, containing only a piezoelectric sensing element assembly, with an integral cable fitted with a connector at its end.
The transducer can also be manufactured with an integral connector (without cable) welded on the transducer's housing.

DETAIL DE LA GAMME

RANGE DETAILS

176 | X | YY | / | M | ZZZ | - | AA

Option 6
AA = Un nombre de 01 à 99 qui indique la longueur du câble en pouce ou en cm / *A number from 01 to 99 which indicates the cable length in inch or cm*

Option 5
\- = Indique qu'une longueur de câble supplémentaire est requise / *Denotes additional cable length is required*

Option 4
ZZZ = Un nombre de 001 à 999 qui indique la longueur du câble en pieds ou en mètres / *A number from 001 to 999 which indicates the cable length in feet or meters*

Option 3
M = Unité métrique (mètre) / *Metric unit (meter)*
Blank = Unité anglaise (pieds) / *English unit (feet)*

Option 2
/ = Indique la longueur du câble spécial à suivre / *Denotes special cable length to follow*

Option 1
YY = Un nombre de 01 à 99 qui indique les possibilités de montage, de diaphragme, de câblage ou de connecteur / *A number from 01 to 99 which indicates mounting, diaphragm, cabling or connector variations*

Famille de capteurs / *Family of Sensors*:
X = Une lettre de A à Z / *A letter from A to Z*

Type du produit / Product Type
176 = Capteur de pression haute température / *High Temperature Pressure Transducer*

CARACTERISTIQUES

Tension maximum d'entrée U_{max} : 30 V d.c.
Courant maximum d'entrée I_{max} : 300 mA

RATINGS

Maximum input voltage U_{max} : 30 V d.c.
Maximum input current I_{max} : 300 mA

Seul le texte en français peut engager la responsabilité du LCIE. Ce document ne peut être reproduit que dans son intégralité, sans aucune modification. Il est établi en accord avec le référentiel de certification ATEX du LCIE. *The LCIE's liability applies only on the French text. This document may only be reproduced in its entirety and without any change. It is issued in accordance with LCIE's ATEX Certification Rules.*

LCIE
Laboratoire Central des Industries Electriques
Une société de Bureau Veritas
33 Avenue du Général Leclerc
92260 Fontenay-aux-Roses
FRANCE
WWW.LCIE.FR

MARQUAGE

Le marquage du produit doit comprendre :

Marquage complet :
PCB Piezotronics Inc. ou IMI Sensors ou IMI
Adresse : …
Type : 176XYY/MZZZ-AA (1)
Numéro de fabrication : …
Année de fabrication : …
Ex II 3 G
Ex ec IIC T6…T770 °C Gc (2)
LCIE 06 ATEX 6041 X

-70 °C ≤ T_{amb} ≤ +… °C (2)

AVERTISSEMENT – NE PAS CONNECTER OU DECONNECTER SOUS TENSION

Marquage réduit :
PCB Piezotronics Inc. ou IMI Sensors ou IMI
Type : 176XYY/MZZZ-AA (1)
N° de fabrication : ...
Année de fabrication : ...
Ex II 3 G
Ex ec IIC T6…T770 °C Gc (2)
LCIE 06 ATEX 6041 X

(1) Complété selon le type
(2) Voir les conditions particulières d'utilisation (la classe de température dépend de T_{amb} max.)

L'appareil doit également comporter le marquage normalement prévu par les normes de construction qui le concernent sous la responsabilité du fabricant.

MARKING

The marking of the product shall include the following :

Full marking:
PCB Piezotronics Inc. or IMI Sensors or IMI
Address : …
Type : 176XYY/MZZZ-AA (1)
Serial number : …
Year of construction : …
Ex II 3 G
Ex ec IIC T6…T770 °C Gc (2)
LCIE 06 ATEX 6041 X

-70 °C ≤ T_{amb} ≤ +… °C (2)

WARNING – DO NOT CONNECT OR DISCONNECT WHEN ENERGIZED

Reduced marking:
PCB Piezotronics Inc. or IMI Sensors or IMI
Type : 176XYY/MZZZ-AA (1)
Serial number : …
Year of construction : …
Ex II 3 G
Ex ec IIC T6…T770 °C Gc (2)
LCIE 06 ATEX 6041 X

(1) Completed as per the type
(2) See the Specific Conditions of Use (the temperature class depends on T_{amb} max.)

The equipment shall also bear the usual marking required by the product standards applying to such equipment under the manufacturer responsibility.

13 CONDITIONS PARTICULIERES D'UTILISATION

a. Gamme de température ambiante de fonctionnement et classement en température :

SPECIFIC CONDITIONS OF USE

Ambient operating temperature range & Temperature classification:

Gamme de température ambiante de fonctionnement *Ambient operating temperature range*	Classement en température *Temperature classification*
-70 °C ≤ T_{amb} ≤ +80 °C	T6
-70 °C ≤ T_{amb} ≤ +95 °C	T5
-70 °C ≤ T_{amb} ≤ +130 °C	T4
-70 °C ≤ T_{amb} ≤ +195 °C	T3
-70 °C ≤ T_{amb} ≤ +290 °C	T2
-70 °C ≤ T_{amb} ≤ +440 °C	T1
-70 °C ≤ T_{amb} ≤ +520 °C	T530 °C
-70 °C ≤ T_{amb} ≤ +650 °C	T660 °C
-70 °C ≤ T_{amb} ≤ +760 °C	T770 °C

b. L'appareil doit uniquement être connecté à une source externe délivrant au maximum une tension de 30 V et un courant de 300 mA.

The transducer shall be connected to an external power supply delivering a maximum of 30 V and 300 mA.

Seul le texte en français peut engager la responsabilité du LCIE. Ce document ne peut être reproduit que dans son intégralité, sans aucune modification. Il est établi en accord avec le référentiel de certification ATEX du LCIE. *The LCIE's liability applies only on the French text. This document may only be reproduced in its entirety and without any change. It is issued in accordance with LCIE's ATEX Certification Rules.*

LCIE
Laboratoire Central des Industries Electriques
Une société de Bureau Veritas
33 Avenue du Général Leclerc
92260 Fontenay-aux-Roses
FRANCE
WWW.LCIE.FR

c. Le montage du produit dans une installation doit être effectué de telle sorte que le corps métallique du capteur et le blindage du câble soient reliés de manière fiable à la terre du système.

The mounting of the transducer in an installation must be carried out in such a way that the metallic housing of the transducer and the cable shield are reliably connected to the system earth.

d. Le connecteur mâle ou femelle homologue fourni par l'utilisateur final doit être conforme à toutes les clauses applicables des normes EN 60079-0 et EN 60079-7. Un degré de protection IP54 minimum selon la norme IEC 60079-0 doit être assuré.
Le connecteur homologue ne doit pas être connecté ou déconnecté sous tension.

The mating connector provided by the end user shall be in accordance with all applicable clauses of IEC 60079-0 and IEC 60079-7 for a zone 2 application. A minimum degree of protection IP54 according to IEC 60079-0 shall be ensured.
The mating connector shall not be connected or disconnected when energized.

e. AVERTISSEMENT – NE PAS CONNECTER OU DECONNECTER SOUS TENSION

WARNING – DO NOT CONNECT OR DISCONNECT WHEN ENERGIZED

14 EXIGENCES ESSENTIELLES DE SANTE ET DE SECURITE

Couvertes par les normes listées au point 8.

ESSENTIAL HEALTH AND SAFETY REQUIREMENTS

Covered by standards listed at 8.

15 DOCUMENTS DESCRIPTIFS / DESCRIPTIVE DOCUMENTS

N°	Description	Reference	Rev.	Date	Page(s)
1.	ATEX Technical file	32142	F	2022-12-22	13
2.	Instructions For Use	35030	--	--	--

16 INFORMATIONS COMPLEMENTAIRES

Essais individuels

Conformément au paragraphe 7.1 de la norme EN 60079-7, chaque produit fabriqué doit être soumis à un essai de rigidité diélectrique à 500 V c.a. pendant 1 minute. Alternativement, le test peut être effectué à 600 V c.a. pendant 100 ms. Aucun claquage ne doit se produire.

ADDITIONAL INFORMATIONS

Routine tests

In accordance with clause 7.1 of standard EN 60079-7, each product manufactured shall be subjected to a dielectric strength test at 500 V a.c. for 1 minute. Alternatively the test may be carried out at 600 V a.c. for 100 ms. No breakdown shall occur.

17 DETAILS DES MODIFICATIONS DE L'ATTESTATION

Version 00 : 05-06-2006 — Certification initiale selon les normes EN 60079-0:2004 et EN 60079-15:2005.

Version 01 : 27-02-2009 — Correction du type : 176 séries.
Mise à jour des documents.
Mise à jour normative selon la norme EN 60079-0:2006.

Version 02 : 17-07-2012 — Mise à jour normative selon les normes EN 60079-0:2009 et EN 60079-15:2010.
Modification des paramètres électriques d'alimentation.

Version 03 : 03-10-2014 — Mise à jour normative selon la norme EN 60079-0:2012.
Modification du classement en température.
Définition des modèles certifiés.

DETAILS OF CERTIFICATE CHANGES

Issue 00: 2006-06-05 — Initial certification according to EN 60079-0:2004 and EN 60079-15:2005 standards.

Issue 01: 2009-02-27 — Correction of the type: 176 series.
Update of documents.
Normative update according to EN 60079-0:2006 standard.

Issue 02: 2012-07-17 — Normative update according to EN 60079-0:2009 and EN 60079-15:2010 standards.
Modification of the power supply electrical parameters.

Issue 03: 2014-10-03 — Normative update according to EN 60079-0:2012 standard.
Modification of the temperature classification.
Definition of certified models.

Seul le texte en français peut engager la responsabilité du LCIE. Ce document ne peut être reproduit que dans son intégralité, sans aucune modification. Il est établi en accord avec le référentiel de certification ATEX du LCIE. *The LCIE's liability applies only on the French text. This document may only be reproduced in its entirety and without any change. It is issued in accordance with LCIE's ATEX Certification Rules.*

LCIE
Laboratoire Central des Industries Electriques
Une société de Bureau Veritas
33 Avenue du Général Leclerc
92260 Fontenay-aux-Roses
FRANCE
WWW.LCIE.FR

Version 04 : 04-08-2015	Mise à jour normative selon la norme EN 60079-0:2012 + A11:2013. Modification de l'élément piézo-électrique. Modification du marquage pour le classement en température. Modification du classement en température dans les conditions spéciales pour une utilisation sûre.	Issue 04: 2015-08-04	Normative update according to EN 60079-0:2012 + A11:2013 standard. Modification of the piezoelectric element. Modification of the marking for the temperature classification. Modification of the temperature classification in the special conditions for safe use.
Version 05 : 21-02-2017	Mise à jour de la température ambiante inférieure de 0 °C à -70 °C.	Issue 05: 2017-02-21	Update of the lower ambient temperature from 0 °C to -70 °C.
Version 06 :	Mise à jour normative selon les normes EN IEC 60079-0:2018 et EN 60079-7:2015 + A1:2018. Extension de la gamme de température ambiante de fonctionnement jusqu'à T_{amb} ≤ +760 °C. Ajout d'une variante avec connecteur intégré (à la place du câble). Mise à jour des conditions particulières d'utilisation.	Issue 06:	Normative update according to EN IEC 60079-0:2018 and EN 60079-7:2015 + A1:2018 standards. Expansion of the ambient operating temperature range up to T_{amb} ≤ +760 °C. Adding of a variant with integral connector (instead of the cable). Update of Specific Conditions of Use.

Seul le texte en français peut engager la responsabilité du LCIE. Ce document ne peut être reproduit que dans son intégralité, sans aucune modification. Il est établi en accord avec le référentiel de certification ATEX du LCIE. *The LCIE's liability applies only on the French text. This document may only be reproduced in its entirety and without any change. It is issued in accordance with LCIE's ATEX Certification Rules.*

LCIE
Laboratoire Central des Industries Electriques
Une société de Bureau Veritas
33 Avenue du Général Leclerc
92260 Fontenay-aux-Roses
FRANCE
WWW.LCIE.FR

IECEx Certificate of Conformity

INTERNATIONAL ELECTROTECHNICAL COMMISSION
IEC Certification System for Explosive Atmospheres

for rules and details of the IECEx Scheme visit www.iecex.com

Certificate No.:	**IECEx LCIE 12.0025X**	Page 1 of 4	Certificate history:
Status:	**Current**	Issue No: 6	Issue 5 (2022-09-09) Issue 4 (2021-09-30) Issue 3 (2017-02-21) Issue 2 (2015-11-09) Issue 1 (2015-08-04) Issue 0 (2012-10-25)
Date of Issue:	2023-09-11		
Applicant:	**PCB Piezontronics, Inc.** 3425 Walden Avenue Depew, NY 14043-2495 **United States of America**		
Equipment:	**High temperature pressure transducer - Type: 176XYY/MZZZ-AA series.**		
Optional accessory:			
Type of Protection:	**Ex ia**		
Marking:	Ex ia IIC T6...T770°C Ga (Refer to attachment for full marking).		

Approved for issue on behalf of the IECEx Certification Body: **Julien GAUTHIER**

Position: **Certification Officer**

Signature: (for printed version)

LABORATOIRE CENTRAL DES INDUSTRIES ELECTRIQUES
S.A.S au capital de 15.745.984 €
RCS Nanterre B 408 363 174
33 avenue du Général Leclerc
F - 92266 FONTENAY AUX ROSES

Date: (for printed version) 2023-09-11

1. This certificate and schedule may only be reproduced in full.
2. This certificate is not transferable and remains the property of the issuing body.
3. The Status and authenticity of this certificate may be verified by visiting www.iecex.com or use of this QR Code.

Certificate issued by:

Laboratoire Central des Industries Electriques (LCIE)
33 Avenue du General Leclerc
FR-92260 Fontenay-aux-Roses
France

IECEx Certificate of Conformity

Certificate No.: **IECEx LCIE 12.0025X**

Date of issue: 2023-09-11

Issue No: 6

Manufacturer: **PCB Piezontronics, Inc.**
3425 Walden Avenue
Depew, NY 14043-2495
United States of America

Manufacturing locations: **PCB**
10869 HWY 903
HALIFAX, NC 27839
United States of America

This certificate is issued as verification that a sample(s), representative of production, was assessed and tested and found to comply with the IEC Standard list below and that the manufacturer's quality system, relating to the Ex products covered by this certificate, was assessed and found to comply with the IECEx Quality system requirements.This certificate is granted subject to the conditions as set out in IECEx Scheme Rules, IECEx 02 and Operational Documents as amended

STANDARDS :
The equipment and any acceptable variations to it specified in the schedule of this certificate and the identified documents, was found to comply with the following standards

IEC 60079-0:2017 Explosive atmospheres - Part 0: Equipment - General requirements
Edition:7.0

IEC 60079-11:2011 Explosive atmospheres - Part 11: Equipment protection by intrinsic safety "i"
Edition:6.0

This Certificate **does not** indicate compliance with safety and performance requirements other than those expressly included in the Standards listed above.

TEST & ASSESSMENT REPORTS:
A sample(s) of the equipment listed has successfully met the examination and test requirements as recorded in:

Test Reports:

FR/LCIE/ExTR12.0028/00
FR/LCIE/ExTR15.0069/00
FR/LCIE/ExTR15.0117/00
FR/LCIE/ExTR16.0088/00
FR/LCIE/ExTR21.0053/00
FR/LCIE/ExTR22.0065/00

Quality Assessment Report:

NL/DEK/QAR14.0004/05

IECEx Certificate of Conformity

EQUIPMENT:
Equipment and systems covered by this Certificate are as follows:

The sensor is made of a hermetically sealed metal housing containing only a piezo-crystal assembly connected to an integral cable (maximum length 61m).

Designation of the model : 176XYY/MZZZ-A ((Refer to attachment for full detail).

SPECIFIC CONDITIONS OF USE: YES as shown below:

- The apparatus can be only connected to certified intrinsically safe equipment. This combination must be compatible as regards intrinsic safety rules (see electrical parameters),
- The mounting of the apparatus into an installation must be carried out in such a way that metallic body of the sensor and cable shield are reliably connected to the system earth.
- The equipment must be mounted in such a way that it is not subjected to mechanical shocks on the sensor.
- Temperature classification (Refer to attachment for full details).

IECEx Certificate of Conformity

DETAILS OF CERTIFICATE CHANGES (for issues 1 and above)
Correction of Manufacturer address (LCIE QUAL 23-17)

Annex:

IECEx LCIE 12.0025X - Annex.pdf

Annex 01 to Certificate
IECEx LCIE 12.0025X issue 06

FULL EQUIPMENT DESCRIPTION

The sensor is made of an hermetically sealed metal housing containing only a piezo-crystal assembly connected to an integral cable.

MARKING

PCB Piezotronics Inc.
Address : …..
Type : 176XYY/MZZZ-AA series
Serial number : …
Year of construction : …
Ex ia IIC T6…T770°C* Ga
IECEx LCIE 12.0025X
*See Temperature classification
U_i : 30V, I_i : 300mA, P_i : 1W, C_i : 5nF, Li : 0,3 mH

Reduced marking :
PCB
Type : 176XYY/MZZZ-AA series
Serial number : …
Year of construction : …
Ex ia IIC T6…T770°C* Ga
IECEx LCIE 12.0025X

RANGE DETAILS

Designation model : 176XYY/MZZZ-AA :

X = A to Z for family code
YY = 01 to 99 for indicate mounting, diaphragm, cabling or connector variations
M = optional to indicate metric cable length
ZZZ = 001 to 999 is optional to indicate cable length in feet (≤ 200 feet) or meters (≤ 61m)
AA = 01 to 99 is optional to indicate fractional length of cable in inches or centimeters

RATINGS

U_i : 30V, I_i : 300mA, P_i : 1W, C_i : 5nF, L_i : 0,3 mH

FULL CONDITIONS OF CERTIFICATION

- The apparatus can be only connected to certified intrinsically safe equipment. This combination must be compatible as regards intrinsic safety rules (see electrical parameters),
- The mounting of the apparatus into an installation must be carried out in such a way that metallic body of the sensor and cable shield are reliably connected to the system earth.
- The equipment must be mounted in such a way that it is not subjected to mechanical shocks on the sensor.
- Temperature classification :

This Annex is valid only in combination with certificate mentioned above and may only be reproduced in its entirety and without any change.
CERT-ATEX-FORM 14 Rev. 03

Temperature classification	Ambient temperature
T6	-70°C ≤ T_{amb} ≤ +80°C
T5	-70°C ≤ T_{amb} ≤ +95°C
T4	-70°C ≤ T_{amb} ≤ +130°C
T3	-70°C ≤ T_{amb} ≤ +195°C
T2	-70°C ≤ T_{amb} ≤ +290°C
T1	-70°C ≤ T_{amb} ≤ +440°C
T530°C	-70°C ≤ T_{amb} ≤ +520°C
T660°C	-70°C ≤ T_{amb} ≤ +650°C
T770°C	-70°C ≤ T_{amb} ≤ +760°C

This Annex is valid only in combination with certificate mentioned above and may only be reproduced in its entirety and without any change.
CERT-ATEX-FORM 14 Rev. 03

IECEx Certificate of Conformity

INTERNATIONAL ELECTROTECHNICAL COMMISSION
IEC Certification System for Explosive Atmospheres

for rules and details of the IECEx Scheme visit www.iecex.com

Certificate No.:	**IECEx LCIE 12.0026X**	Page 1 of 4	Certificate history:
Status:	**Current**	Issue No: 4	Issue 3 (2017-02-21) Issue 2 (2015-11-09) Issue 1 (2015-08-04) Issue 0 (2012-10-25)
Date of Issue:	2023-01-11		
Applicant:	**PCB Piezotronics Inc.** 3425 Walden Avenue Depew, New York 14043 **United States of America**		
Equipment:	**High temperature pressure transducers - Type: 176XYY/MZZZ-AA series**		
Optional accessory:			
Type of Protection:	**Ex ec**		
Marking:	Ex ec IIC T6…T770 °C Gc *(refer to Annex for full marking)*		

Approved for issue on behalf of the IECEx Certification Body: **Julien GAUTHIER**

Position: **Certification Officer**

Signature: (for printed version)

LABORATOIRE CENTRAL DES INDUSTRIES ELECTRIQUES
S.A.S au capital de 15.745.984 €
RCS Nanterre B 408 363 174
33 avenue du Général Leclerc
F - 92266 FONTENAY AUX ROSES

Date: (for printed version) 2023-01-11

1. This certificate and schedule may only be reproduced in full.
2. This certificate is not transferable and remains the property of the issuing body.
3. The Status and authenticity of this certificate may be verified by visiting www.iecex.com or use of this QR Code.

Certificate issued by:

Laboratoire Central des Industries Electriques (LCIE)
33 Avenue du General Leclerc
FR-92260 Fontenay-aux-Roses
France

IECEx Certificate of Conformity

Certificate No.: **IECEx LCIE 12.0026X**

Date of issue: 2023-01-11

Issue No: 4

Manufacturer: **PCB Piezotronics Inc.**
3425 Walden Avenue
Depew, New York 14043
United States of America

Manufacturing locations:

PCB Piezotronics Inc.
3425 Walden Avenue
Depew, New York 14043
United States of America

PCB Piezotronics of North Carolina Inc.
10869 Hwy 903
Halifax, NC 27839
United States of America

This certificate is issued as verification that a sample(s), representative of production, was assessed and tested and found to comply with the IEC Standard list below and that the manufacturer's quality system, relating to the Ex products covered by this certificate, was assessed and found to comply with the IECEx Quality system requirements.This certificate is granted subject to the conditions as set out in IECEx Scheme Rules, IECEx 02 and Operational Documents as amended

STANDARDS :
The equipment and any acceptable variations to it specified in the schedule of this certificate and the identified documents, was found to comply with the following standards

IEC 60079-0:2017 Explosive atmospheres - Part 0: Equipment - General requirements
Edition:7.0

IEC 60079-7:2017 Explosive atmospheres - Part 7: Equipment protection by increased safety "e"
Edition:5.1

This Certificate **does not** indicate compliance with safety and performance requirements other than those expressly included in the Standards listed above.

TEST & ASSESSMENT REPORTS:
A sample(s) of the equipment listed has successfully met the examination and test requirements as recorded in:

Test Reports:

FR/LCIE/ExTR12.0029/00
FR/LCIE/ExTR15.0070/00
FR/LCIE/ExTR16.0088/00
FR/LCIE/ExTR23.0002/00

Quality Assessment Report:

NL/DEK/QAR14.0004/06

IECEx Certificate of Conformity

EQUIPMENT:
Equipment and systems covered by this Certificate are as follows:

The pressure transducer consists of a metallic hermetically sealed housing, containing only a piezoelectric sensing element assembly, with an integral cable fitted with a connector at its end.
The transducer can also be manufactured with an integral connector (without cable) welded on the transducer's housing.

Instructions for Use: document No. 35030.

Range details: Refer to the Annex

Ratings: Refer to the Annex

SPECIFIC CONDITIONS OF USE: YES as shown below:
Refer to the Annex for full Specific Conditions of Use.

IECEx Certificate of Conformity

DETAILS OF CERTIFICATE CHANGES (for issues 1 and above)

Issue 1:
- Modification of the piezoelectric element.
- Modification of the marking for the temperature classifcation.
- Modification of the temperature classification in the Specific Conditions of Use.

Issue 2:
- Addition of a manufacturing location.

Issue 3:
- Update of the lower ambient temperature from 0 °C to -70 °C.

Issue 4:
- Normative update according to IEC 60079-0 Ed. 7.0 and IEC 60079-7 Ed. 5.1.
- Expansion of the ambient operating temperature range up to $T_{amb} \leq +760$ °C.
- Adding of a variant with integral connector (instead of the cable).
- Update of Specific Conditions of Use.

Annex:

Annex 01 to Certificate IECEx LCIE 12.0026X issue 4_1.pdf

MARKING

Complete marking:
PCB Piezotronics Inc. or IMI Sensors or IMI
Address: …
Type: 176XYY/MZZZ-AA [(1)]
Serial number: …
Year of construction: …

Ex ec IIC T6…T770 °C Gc [(2)]

IECEx LCIE 12.0026X

-70 °C ≤ T_{amb} ≤ +… °C [(2)]

WARNING – DO NOT CONNECT OR DISCONNECT WHEN ENERGIZED

Reduced marking:
PCB Piezotronics Inc. or IMI Sensors or IMI
Type: 176XYY/MZZZ-AA [(1)]
Serial number: …
Year of construction: …

Ex ec IIC T6…T770 °C Gc [(2)]

IECEx LCIE 12.0026X

[(1)] Completed as per the type
[(2)] See the Specific Conditions of Use (the temperature class depends on T_{amb} max.)

RANGE DETAILS

176 X YY / M ZZZ - AA

Option 6
AA = A number from 01 to 99 which indicates the cable length in inch or cm

Option 5
- = Denotes additional cable length is required

Option 4
ZZZ = A number from 001 to 999 which indicates the cable length in feet or meters

Option 3
M = Metric units (meter)
Blank = English units (feet)

Option 2
/ = Denotes special cable length to follow

Option 1
YY = A number from 01 to 99 which indicates mounting, diaphragm, cabling or connector variations

Family of Sensors:
X = A letter from A to Z

Product Type
176 = High Temperature Pressure Transducer

This Annex is valid only in combination with certificate mentioned above and may only be reproduced in its entirety and without any change.
CERT-ATEX-FORM 14 Rev. 03

FULL CONDITIONS OF CERTIFICATION

a. Ambient operating temperature range & Temperature classification:

Ambient operating temperature range	Temperature classification
-70 °C ≤ T_{amb} ≤ +80 °C	T6
-70 °C ≤ T_{amb} ≤ +95 °C	T5
-70 °C ≤ T_{amb} ≤ +130 °C	T4
-70 °C ≤ T_{amb} ≤ +195 °C	T3
-70 °C ≤ T_{amb} ≤ +290 °C	T2
-70 °C ≤ T_{amb} ≤ +440 °C	T1
-70 °C ≤ T_{amb} ≤ +520 °C	T530 °C
-70 °C ≤ T_{amb} ≤ +650 °C	T660 °C
-70 °C ≤ T_{amb} ≤ +760 °C	T770 °C

b. The mounting of the transducer into an installation must be carried out in such a way that transducer metallic body and cable shield are reliably connected to the system earth.

c. The transducer shall be connected to an external power supply delivering a maximum of 30 V and 300 mA.

d. The mating connector provided by the end user shall be in accordance with all applicable clauses of IEC 60079-0 and IEC 60079-7 for a zone 2 application. A minimum degree of protection IP54 according to IEC 60079-0 shall be ensured.
The mating connector shall not be connected or disconnected when energized.

e. WARNING – DO NOT CONNECT OR DISCONNECT WHEN ENERGIZED

RATINGS

Ambient operating temperature range: -70 °C ≤ T_{amb} ≤ +760 °C
Maximum input voltage U_{max} : 30 V d.c.
Maximum input current I_{max} : 300 mA

ROUTINE TESTS

In accordance with clause 7.1 of standard IEC 60079-7, each product manufactured shall be subjected to a dielectric strength test at 500 V a.c. for 1 minute. Alternatively the test may be carried out at 600 V a.c. for 100 ms. No breakdown shall occur.

This Annex is valid only in combination with certificate mentioned above and may only be reproduced in its entirety and without any change.
CERT-ATEX-FORM 14 Rev. 03

指定機械、設備或器具安全資訊網站申報
登錄完成通知書

Registration Document for the Declaration and Registration scheme of the required machinery, equipment and tools

登錄完成通知書號碼： ML121200702KG0
Document No.

茲據職業安全衛生法第七條第三項規定辦理安全資訊申報，經確認符合規定，
准予登錄並使用安全標示 及識別號碼：TD12000O。其登錄事項如下：

The document made under Paragraph 3 in Article 7 of the Occupational Safety and Health Act has been reviewed and found to be in compliance with related regulations. Therefore, registration is granted with the Safety Label and the Identification No. TD12000O. Details of the registration are as follows:

申請人： 昱宥科技有限公司　　統一編號： 42826742
Application　　Uniform No.

地址： 臺北市中山區復興北路368號5樓
Address

生產廠場/廠址：
Factory/Factory address

廠場項次 Factory Items	生產廠場 Factory	廠址 Factory Address	國別代碼 Country Code
1	PCB Piezontronics, Inc.	3425 Walden Avenue Depew, NY 14043-2495	US

產品種類名稱：防爆電氣設備
Type/ name of product

貨品分類號列：90268020001
C.C.C. Code

中文名稱：高溫壓力傳感器
Chinese name

英文名稱：High temperature pressure transducers
English name

型式：176XYY/MZZZ-AA
Type

主型式序號：
Type number

系列型式：如附錄
Series of the type

依據標準：
Safety standards

廠場項次 Factory Items	驗證方式	標準

版次v-a

指定機械、設備或器具安全資訊網站申報
登錄完成通知書

Registration Document for the Declaration and Registration scheme of the required machinery, equipment and tools

1	國內/外驗證機構	國內/外認證組織名稱：IECEx 國內/外驗證機構名稱：Laboratoire Central des Industries Electriques (LCIE) 產品驗證機構審驗合格證明書：IECEx LCIE 12.0026X 合格證明書有效日期：113/06/12

勞動部核發

This document shall be issued by the Ministry of Labor (MOL).

登錄有效期限： 112年05月29日 至 115年05月28日

Valid period for Prior Release (year) (month) (day) (year) (month) (day)

證書內容加註意見：

註1：持本登錄完成通知書進口申報登錄產品時，進口人須與本登錄完成通知書名義人相同。

註2：本登錄完成通知書之效期依通知書上所載期限為准，且不得逾越測試驗證之證明文件效期之屆滿日期。如該登錄完成通知書上所載測試驗證之證明文件效期屆滿日期，早於本登錄完成通知書上所載之效期，依法以該測試驗證之證明文件效期為準，逾期則該通知書效期亦失效。如該測試驗證之證明文件效期即將屆滿，請於屆滿日前三個月內向核發單位申請展延之測試驗證之證明文件，並於系統提出變更測試驗證之證明文件之申請，以維持該登錄完成通知書效期之有效性。逾測試驗證之證明文件或登錄完成通知書之效期屆滿後始提出變更申請者，須重新申報登錄。另如測試驗證之證明文件效期尚未屆滿，但登錄完成通知書之效期即將屆滿，請於登錄完成通知書之效期屆滿日前三個月內提出登錄完成通知書之展延申請，逾登錄完成通知書或測試驗證之證明文件效期屆滿日提出申請者，該登錄完成通知書效期失效，須重新申報登錄。

註3：持本登錄完成通知書者，請至機械設備器具安全資訊網(https://tsmark.osha.gov.tw)查對通知書之字號、廠商及產品等資訊，如發現有差異，請通知勞動部職業安全衛生署查處。

指定機械、設備或器具安全資訊網站申報
登錄完成通知書

Registration Document for the Declaration and Registration scheme of the required machinery, equipment and tools

附錄

註1：關務署限制報關之項次位數僅到四位數，項次超過四位數者將無法進行報關，敬請將較常報關之系列型式優先申報。

系列型式：

Series of the type

項次	廠場項次	系列型式	貨品分類號列	允許多系列型式	國別代碼
0001	1	詳見附錄	90268020001		US

指定機械、設備或器具安全資訊網站申報
登錄完成通知書

Registration Document for the Declaration and Registration scheme
of the required machinery, equipment and tools

項次	系列型式
0001	176XYY/MZZZ-AA

版次v-a