Model CS649A03

Bearing Fault Detector

Installation and Operating Manual

For assistance with the operation of this product,
contact PCB Piezotronics, Inc.

Toll-free: 800-959-4464
24-hour SensorLine: 716-684-0001
Fax: 716-684-3823
E-mail: imi@pcb.com
Web: www.imi-sensors.com

Service, Repair, and Return Policies and Instructions

The information contained in this document supersedes all similar information that may be found elsewhere in this manual.

Service – Due to the sophisticated nature of the sensors and associated instrumentation provided by PCB Piezotronics, user servicing or repair is not recommended and, if attempted, may void the factory warranty. Routine maintenance, such as the cleaning of electrical connectors, housings, and mounting surfaces with solutions and techniques that will not harm the physical material of construction, is acceptable. Caution should be observed to ensure that liquids are not permitted to migrate into devices that are not hermetically sealed. Such devices should only be wiped with a dampened cloth and never submerged or have liquids poured upon them.

Repair – In the event that equipment becomes damaged or ceases to operate, arrangements should be made to return the equipment to PCB Piezotronics for repair. User servicing or repair is not recommended and, if attempted, may void the factory warranty.

Calibration – Routine calibration of sensors and associated instrumentation is recommended as this helps build confidence in measurement accuracy and acquired data. Equipment calibration cycles are typically established by the users own quality regimen. When in doubt about a calibration cycle, a good “rule of thumb” is to recalibrate on an annual basis. It is also good practice to recalibrate after exposure to any severe temperature extreme, shock, load, or other environmental influence, or prior to any critical test.

PCB Piezotronics maintains an ISO-9001 certified metrology laboratory and offers calibration services, which are accredited by A2LA to ISO/IEC 17025, with full traceability to SI through N.I.S.T. In addition to the normally supplied calibration, special testing is also available, such as: sensitivity at elevated or cryogenic temperatures, phase response, extended high or low frequency response, extended range, leak testing, hydrostatic pressure testing, and others. For information on standard recalibration services or special testing, contact your local PCB Piezotronics distributor, sales representative, or factory customer service representative.

Returning Equipment – *Following these procedures will ensure that your returned materials are handled in the most expedient manner*. Before returning any equipment to PCB Piezotronics, contact your local distributor, sales representative, or factory customer service representative to obtain a Return **Warranty, Service, Repair, and Return Policies and Instructions** Materials Authorization (RMA) Number. This RMA number should be clearly marked on the outside of all package(s) and on the packing

list(s) accompanying the shipment. A detailed account of the nature of the problem(s) being experienced with the equipment should also be included inside the package(s) containing any returned materials.

A Purchase Order, included with the returned materials, will expedite the turn-around of serviced equipment. It is recommended to include authorization on the Purchase Order for PCB to proceed with any repairs, as long as they do not exceed 50% of the replacement cost of the returned item(s). PCB will provide a price quotation or replacement recommendation for any item whose repair costs would exceed 50% of replacement cost, or any item that is not economically feasible to repair. For routine calibration services, the Purchase Order should include authorization to proceed and return at current pricing, which can be obtained from a factory customer service representative.

Contact Information – International customers should direct all inquiries to their local distributor or sales office. A complete list of distributors and offices can be found at www.pcb.com. Customers within the United States may contact their local sales representative or a factory customer service representative. A complete list of sales representatives can be found at www.pcb.com. Toll-free telephone numbers for a factory customer service representative, in the division responsible for this product, can be found on the title page at the front of this manual. Our ship to address and general contact numbers are:

PCB Piezotronics, Inc.
3425 Walden Ave.
Depew, NY14043 USA
Toll-free: (800) 828-8840
24-hour SensorLine^{SM}: (716) 684-0001
Website: www.pcb.com
E-mail: info@pcb.com

PCB工业监视和测量设备 - 中国RoHS2公布表

PCB Industrial Monitoring and Measuring Equipment - China RoHS 2 Disclosure Table

部件名称	有害物质					
	铅 (Pb)	汞 (Hg)	镉 (Cd)	六价铬 (Cr(VI))	多溴联苯 (PBB)	多溴二苯醚 (PBDE)
住房	O	O	O	O	O	O
PCB板	X	O	O	O	O	O
电气连接器	O	O	O	O	O	O
压电晶体	X	O	O	O	O	O
环氧	O	O	O	O	O	O
铁氟龙	O	O	O	O	O	O
电子	O	O	O	O	O	O
厚膜基板	O	O	X	O	O	O
电线	O	O	O	O	O	O
电缆	X	O	O	O	O	O
塑料	O	O	O	O	O	O
焊接	X	O	O	O	O	O
铜合金/黄铜	X	O	O	O	O	O

本表格依据 SJ/T 11364 的规定编制。

O： 表示该有害物质在该部件所有均质材料中的含量均在 GB/T 26572 规定的限量要求以下。

X： 表示该有害物质至少在该部件的某一均质材料中的含量超出 GB/T 26572 规定的限量要求。
铅是欧洲RoHS指令2011/65/ EU附件三和附件四目前由于允许的豁免。

CHINA RoHS COMPLIANCE

Component Name	Hazardous Substances					
	Lead (Pb)	**Mercury (Hg)**	**Cadmium (Cd)**	**Chromium VI Compounds (Cr(VI))**	**Polybrominated Biphenyls (PBB)**	**Polybrominated Diphenyl Ethers (PBDE)**
Housing	O	O	O	O	O	O
PCB Board	X	O	O	O	O	O
Electrical Connectors	O	O	O	O	O	O
Piezoelectric Crystals	X	O	O	O	O	O
Epoxy	O	O	O	O	O	O
Teflon	O	O	O	O	O	O
Electronics	O	O	O	O	O	O
Thick Film Substrate	O	O	X	O	O	O
Wires	O	O	O	O	O	O
Cables	X	O	O	O	O	O
Plastic	O	O	O	O	O	O
Solder	X	O	O	O	O	O
Copper Alloy/Brass	X	O	O	O	O	O

This table is prepared in accordance with the provisions of SJ/T 11364.

O: Indicates that said hazardous substance contained in all of the homogeneous materials for this part is below the limit requirement of GB/T 26572.

X: Indicates that said hazardous substance contained in at least one of the homogeneous materials for this part is above the limit requirement of GB/T 26572.
Lead is present due to allowed exemption in Annex III or Annex IV of the European RoHS Directive 2011/65/EU.

Model Number	BEARING FAULT DETECTOR PLUS	Revision: F
649A03		ECN #: 45941

Performance	**ENGLISH**	**SI**	
Output(Loop power)	4-20 mA	4-20 mA	
Sampling Time	1 sec	1 sec	
Measurement Range(HPF 250 Hz)	0-2 to 0-50 g pk	0-2 to 0-50 g pk	[1][2]
Measurement Range(HPF 2500 Hz)	0-2 to 0-50 RMS	0-2 to 0-50 RMS	[1][2]
Compensated Peak(HPF 250 Hz)	1 to 16	1 to 16	
Crest Factor(HPF 250 Hz)	1 to 16	1 to 16	[1]
Crest Factor Plus(HPF 250 Hz)	1 to 16	1 to 16	[1]
Bearing Diameter	1.57 to 19.69 in	40 to 500 mm	
Bearing Rotation Speed	600 to 4800 RPM	10 to 80 Hz	
Linearity(Loop powered)	10 %	10 %	
Environmental			
Temperature Range	-40 to 212 °F	-40 to 100 °C	
Storage Temperature Range	-40 to 257 °F	-40 to 125 °C	
Electrical			
Excitation Voltage	15 to 30 VDC	15 to 30 VDC	
Load Resistance	50(Vs-15) Ohm	50(Vs-15) Ohm	
Electrical Isolation	>10^8 Ohm	>10^8 Ohm	
Physical			
Size (Height x Hex)	2.60 in x 1.25 in	66 mm x 32 mm	
Weight	5.7 oz	162 gm	[3]
Mounting Thread	1/4 - 28 UNF	1/4 - 28 UNF	
Mounting Torque	3 to 5 ft-lb	4 to 7 Nm	
Sensing Element	Piezoelectric Accelerometer	Piezoelectric Accelerometer	
Housing Material	Stainless Steel	Stainless Steel	
Sealing	Welded Hermetic	Welded Hermetic	
Electrical Connector	2-Pin MIL-C-5015	2-Pin MIL-C-5015	
Electrical Connection Position	Top	Top	
Electrical Connections(Pin A)	4-20 mA Pos (+)	4-20 mA Pos (+)	
Electrical Connections(Pin B)	4-20 mA Neg (-)	4-20 mA Neg (-)	
Overload Limit (Shock)	5000 g pk	49,050 m/s² pk	

CE [4]

C US

All specifications are at room temperature unless otherwise specified.
In the interest of constant product improvement, we reserve the right to change specifications without notice.

ICP® is a registered trademark of PCB Group, Inc.

OPTIONAL VERSIONS

Optional versions have identical specifications and accessories as listed for the standard model except where noted below. More than one option may be used.

CS - Canadian Standards Association Approved Intrinsically Safe

M - Metric Mount
Supplied Accessory : Model M081A61 Mounting Stud 1/4-28 to M6 X 1 (1)

NOTES:

[1] Customer programmable parameters
[2] With 0.1g Step
[3] Typical.
[4] See PCB Declaration of Conformance PS124 for details.

SUPPLIED ACCESSORIES:

Model 081A41 Mounting stud 1/4-28 socket head set screw brass tip stainless steel 5/8" long (1)

Entered: LK	Engineer: NJF	Sales: MC	Approved: NJF	Spec Number:
Date: 9/12/2016	Date: 9/12/2016	Date: 9/12/2016	Date: 9/12/2016	**45609**

IMI SENSORS
A PCB PIEZOTRONICS DIV.
3425 Walden Avenue, Depew, NY 14043

Phone: 800-959-4464
Fax: 716-684-3823
E-Mail: imi@pcb.com

45610

RELATED DRAWING

NO MODIFICATIONS PERMITTED WITHOUT THE APPROVAL OF THE AUTHORIZED PERSON

REVISIONS		
REV	DESCRIPTION	DIN
C	ADDED RELATED BLOCK	43847

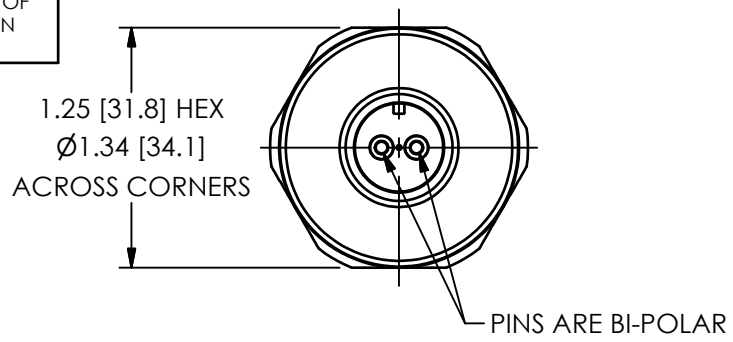

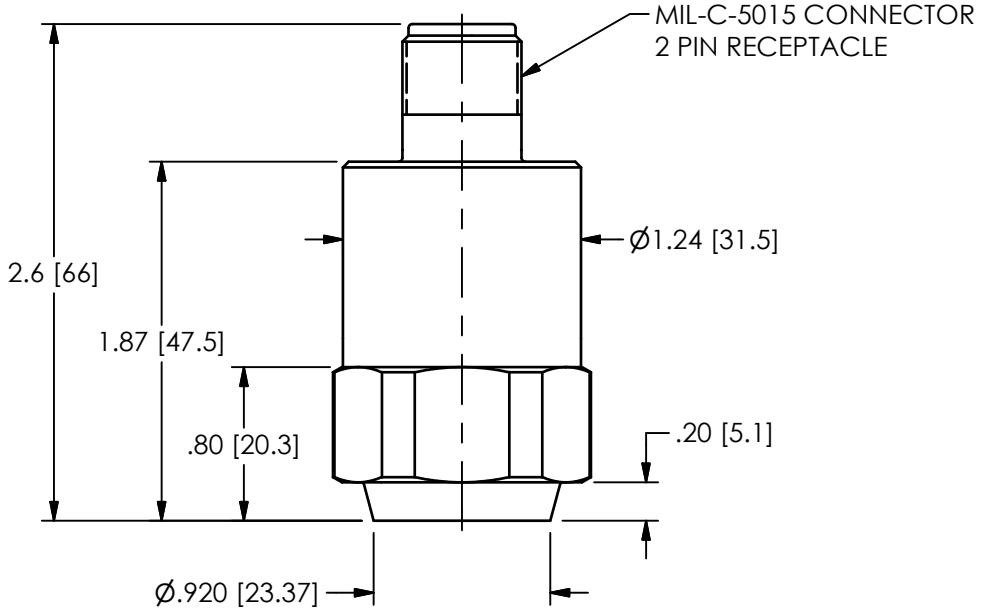

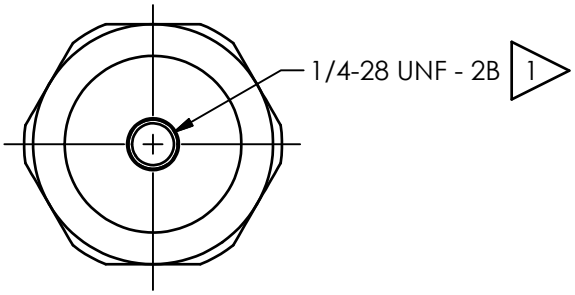

1 MODEL 081A40 MOUNTING STUD SUPPLIED AS STANDARD. FOR M PREFIXES (M649A03) MODEL M081A61 (M6 X 1.0 TO $\frac{1}{4}$-28) MOUNTING STUD REPLACES 081A40.

UNLESS OTHERWISE SPECIFIED TOLERANCES ARE:		DRAWN		CHECKED		ENGINEER	
DIMENSIONS IN INCHES	DIMENSIONS IN MILLIMETERS [IN BRACKETS]	BB	10/15/15	ECB	10/15/15	GGS	10/15/15
DECIMALS XX ±.03 XXX ±.010	DECIMALS X ± 0.8 XX ± 0.25	TITLE					
ANGLES ± 2 DEGREES	ANGLES ± 2 DEGREES	OUTLINE DRAWING MODEL (CS)649A03 BEARING FAULT DETECTOR PLUS					
FILLETS AND RADII .003 - .005	FILLETS AND RADII 0.07 - 0.13						

PCB PIEZOTRONICS
3425 WALDEN AVE. DEPEW, NY 14043
(716) 684-0001 E-MAIL: sales@pcb.com

CODE IDENT. NO. 52681	DWG. NO. 45610
SCALE: FULL	SHEET 1 OF 1

60906

SCHEDULE DRAWING

NO MODIFICATIONS PERMITTED WITHOUT REFERENCE TO THE NOTIFIED BODY

REVISIONS		
REV	DESCRIPTION	DIN
NR	RELEASED TO DRAFTING	43847

NON- HAZARDOUS/SAFE AREA

CONDUIT/CABLE

HAZARDOUS AREA
DIV 1
ZONE 0

TRANSDUCER

PN: CS649X9Y

SINGLE CHANEL

3

TYPICAL BARRIER CONFIGURATION [MTL7106 RECOMMENDED]

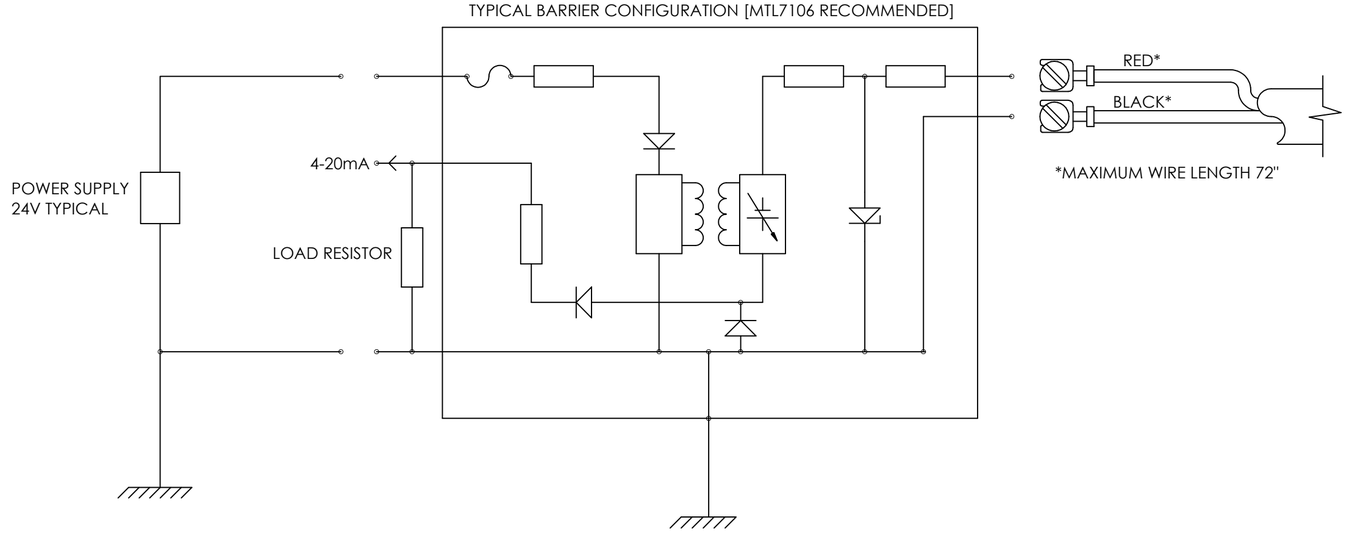

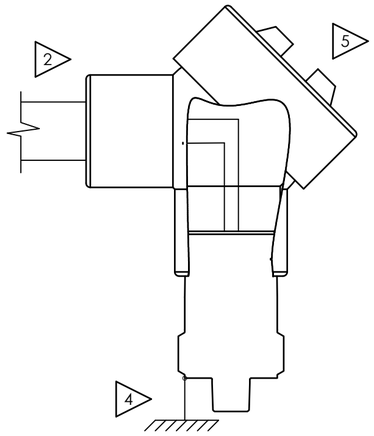

8 THE SENSOR CONNECTOR HAS GLASS FUSED PARTS

7 CABLE- CONXALL P/N I1943R TO I1943-XR OR EQUIVALENT
X IS A PLACE HOLDER WHICH INDICATES CABLE LENGTH

REQUIRMENTS OF CABLE ARE:
-MOLDED CABLE
-PROVIDE MINIMUM THREE FULL THREADS OF ENGAGEMENT WITH MATING PART

6 SHIELDS TO BE EARTHED AT BARRIER ENDS

5 PCB P/N 100-7094-90 OR EQUIVALENT. ALL CONDUIT AND JUNCTION BOXES MUST MEET THE CLASS, DIVISION, GROUP, AND INSTALLATION METHOD AS REQUIRED BY THE APPLICATION AND LOCAL GOVERNING AGENCY.

4 THE INSTALLER SHALL INSURE THAT THE TRANSDUCER MOUNTING STRUCTURE IS AT THE SAME GROUNDING POTENTIAL AS THE BARRIER GROUND. TOTAL EARTH LOOP IMPEDANCE SHALL BE LESS THAN ONE OHM.

3 BARRIER WILL BE MOUNTED IN AN ENCLOSURE THE SUITABILITY OF WHICH WILL BE DETERMINED BY LOCAL AUTHORITIES.

2 ENTITY APPLICATION:

BARRIER		I.S. APPARATUS
Voc/Uo	≤	V_{MAX} /Ui
Isc/Io	≤	I_{MAX} /Ii
Ca/Co	>	Ci + C_{CABLE}
La/Lo	>	Li+L_{CABLE}
Po	≤	Pi (CENELEC ONLY)

BARRIERS WITHIN THE SPECIFIED LIMITATIONS ARE PERMITTED.

ENTITY PARAMETERS (CS649X9Y AND CS649X0Y):
Ui = 30V
Ii = 100mA
Pi = 1w
Ci = 0
Li = 28 uH

CERTIFIED BY THE APPROPRIATE APPROVAL AUTHORITY FOR CONNECTION TO THE FOLLOWING AREAS:
ZONE 0
Exia IIC T4
AExia IIC T4
DIV 1
CLASS I, GROUPS A,B,C,D
CLASS II, GROUPS E,F,G
CLASS III

1.) PART NO IS CS649X9Y AND CS649X0Y

NOTES:UNLESS OTHERWISE SPECIFIED.

NON- HAZARDOUS/SAFE AREA

CONDUIT/CABLE

HAZARDOUS AREA
DIV 1
ZONE 0

TRANSDUCER

PN: CS649X0Y

SINGLE CHANEL

3

TYPICAL BARRIER CONFIGURATION [MTL7106 RECOMMENDED]

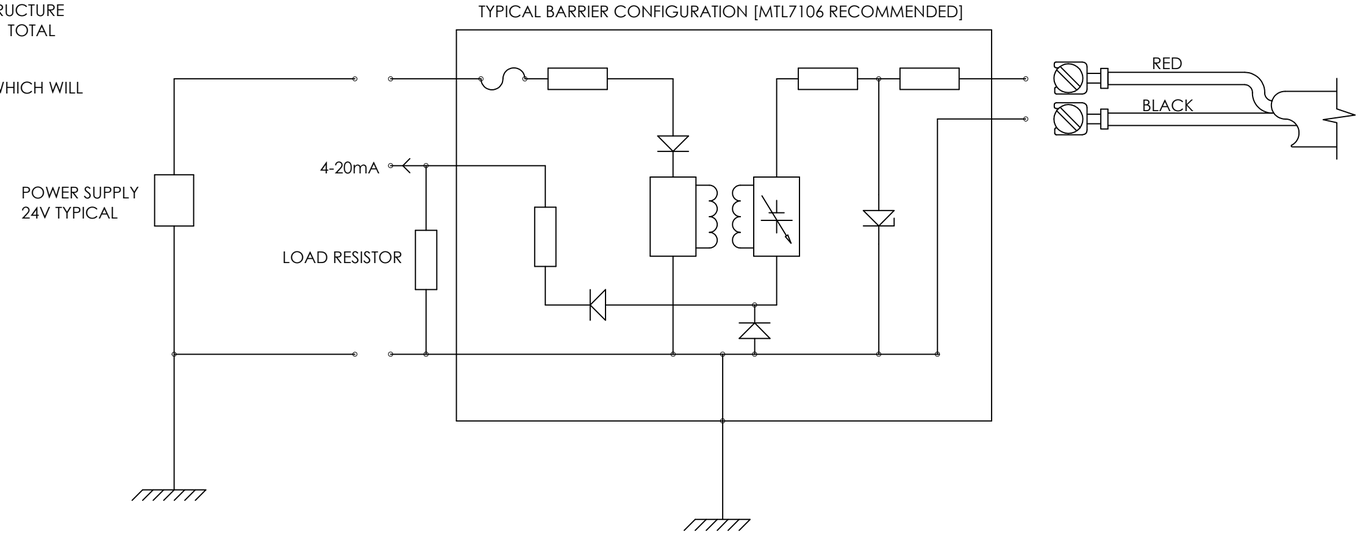

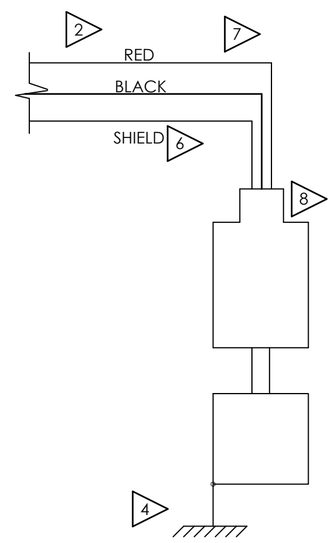

UNLESS OTHERWISE SPECIFIED	DRAWN		CHECKED		ENGINEER	
DIMENSIONS ARE IN INCHES DECIMALS X ± .05 XX ± .01 XXX ± .005 XXXX ± .0005 ANGLES ± 2 DEGREES FILLETS AND RADII .003 - .005	BB	2/24/15	ECB	2/24/15	GGS	2/24/15
HEX DIMENSIONS ARE: ≤ .5 + .000 / - .003 > .5 + .000 / - .005	TITLE CSA APPROVAL CS649X9Y AND CS649X0Y SERIES INTERCONNECTION					
INTERNAL THREAD DEPTH MIN. REMOVE ALL BURRS SHARP = R.000 - R.003						

PCB PIEZOTRONICS
3425 WALDEN AVE. DEPEW, NY 14043
(716) 684-0002 E-MAIL: sales@pcb.com

CODE IDENT. NO. 52681 | DWG. NO. 60906

SCALE: NONE | SHEET 1 OF 2

60906

SCHEDULE DRAWING

NO MODIFICATIONS PERMITTED WITHOUT REFERENCE TO THE NOTIFIED BODY

REVISIONS		
REV	DESCRIPTION	DIN
	-SEE SHEET 1-	

NON- HAZARDOUS/SAFE AREA
OR DIV 2 / ZONE 2

POWER SUPPLY
SIGNAL CONDITIONER

CONDUIT/CABLE

TRANSDUCER

PN: CS649X9Y

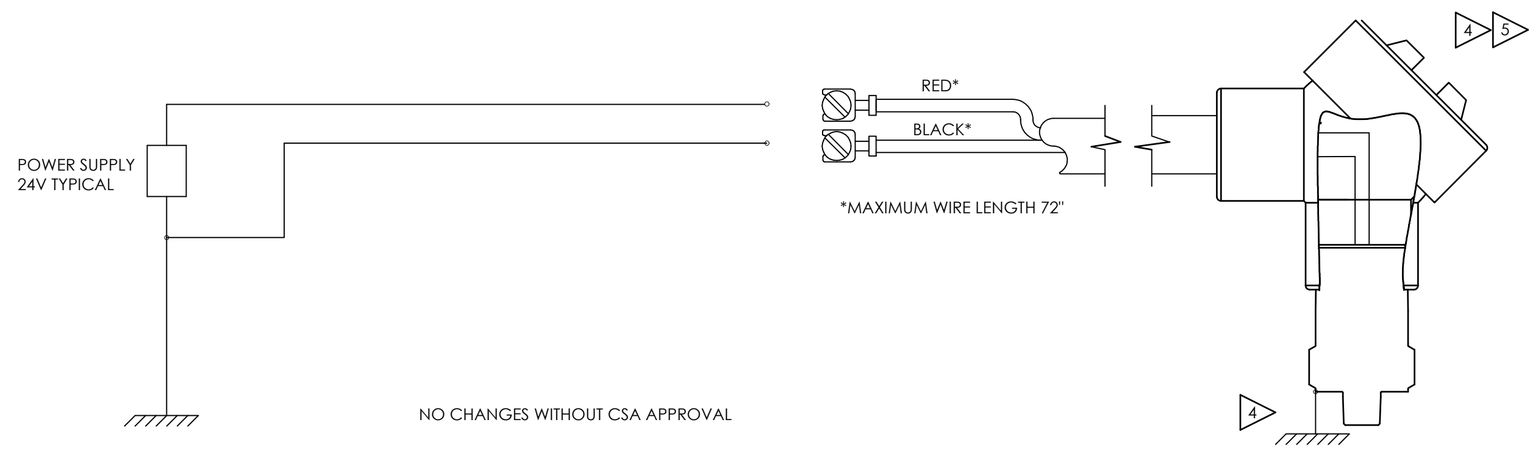

NO CHANGES WITHOUT CSA APPROVAL

NON- HAZARDOUS/SAFE AREA
OR DIV2/ZONE 2

SINGLE CHANEL

CONDUIT/CABLE

TRANSDUCER

PN: CS649X0Y

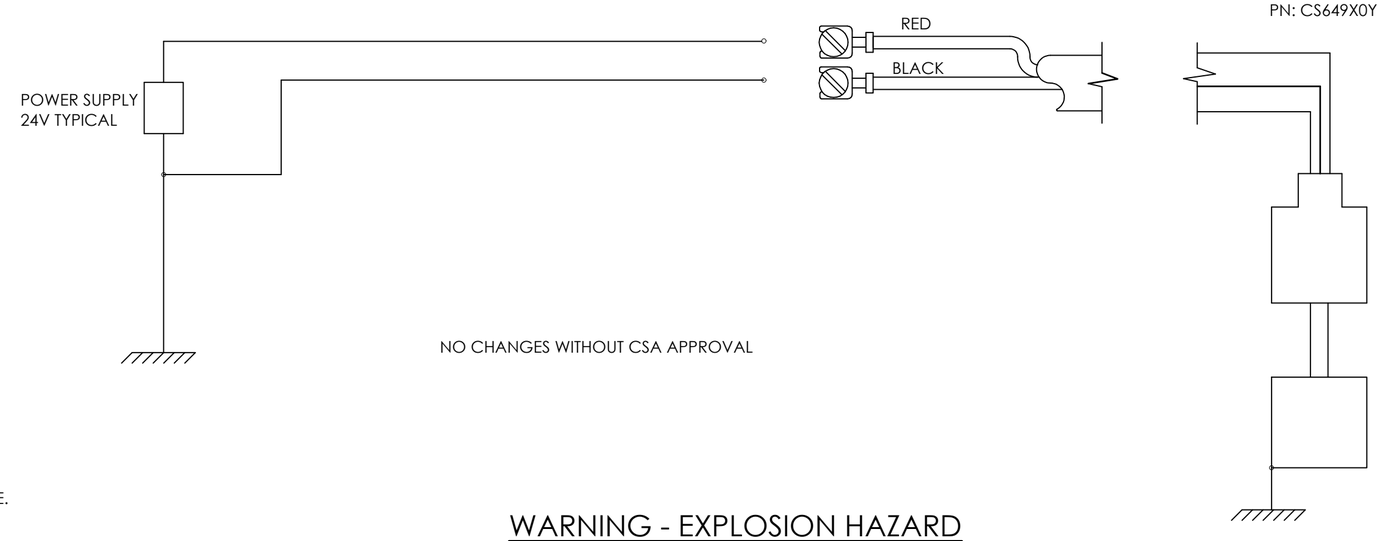

NO CHANGES WITHOUT CSA APPROVAL

6.) FOR CANADIAN DIVISION 2 INSTALLATION, POWER SUPPLY MUST BE CSA CERTIFIED WITH ENTITY PARAMETERS (SEE PAGE 1, NOTE 2 FOR POWER SUPPLY OUTPUT PARAMETERS). FOR US DIVISION 2 INSTALLATION POWER SUPPLY MUST BE APPROVED BY NRTL, WITH ENTITY OUTPUT PARAMETERS(SEE PAGE 1, NOTE 2 FOR POWER SUPPLY OUTPUT PARAMETERS).

5 PCB P/N 100-7094-90 OR EQUIVALENT. SENSOR MUST BE INSTALLED IN A SUITABLE ENCLOSURE, ACCEPTABLE TO THE LOCAL INSPECTION AUTHORITY HAVING JURISDICTION. SENSOR CASE MUST BE BONDED TO GROUND ACCORDING TO SECTION 18-182 OF THE CEC, PART 1 AND ACCORDING TO ARTICLE 501.16 OF THE NEC AS APPLICABLE.

4 SENSOR MUST BE MOUNTED DIRECTLY ON A CONDUCTIVE STRUCTURE, WHICH IS VERIFIED TO BE CONNECTED TO SUPPLY SOURCE GROUND. OTHERWISE, USE CORTEM CONDUIT JUNCTION BOX PART NUMBER SB-36 OR EQUIVALENT CONTAINING INTEGRAL GROUND SCREW CONNECTED TO SUPPLY SOURCE GROUND.

3.) FOR GUIDANCE ON CANADIAN INSTALLATION, REFER TO CEC PART I. FOR GUIDANCE ON U.S. INSTALLATION, INSTALL IN ACCORDANCE WITH NEC [ANSI/NFPA70] AND [ANSI/ISA RP12.6].

2.) CERTIFIED BY THE APPROPRIATE APPROVAL AUTHORITY FOR CONNECTION TO THE FOLLOWING AREAS:
- ZONE 2
  - Ex ic IIC T4
  - AEx ic IIC T4
- DIV 2
  - CLASS I, DIV 2, GROUPS A,B,C,D NON-INCENDIVE FIELD WIRING

1.) PART NUMBER IS CS649X9Y, AND CS649X0Y

WARNING - EXPLOSION HAZARD

DO NOT DISCONNECT EQUIPMENT UNLESS POWER HAS BEEN SWITCHED OFF OR THE AREA IS KNOWN TO BE NON-HAZARDOUS

UNLESS OTHERWISE SPECIFIED
DIMENSIONS ARE IN INCHES
DECIMALS X ± .05
XX ± .01
XXX ± .005
XXXX ± .0005
ANGLES ± 2 DEGREES
FILLETS AND RADII .003 - .005
HEX DIMENSIONS ARE:
≤ .5 + .000 / - .003
> .5 + .000 / - .005
INTERNAL THREAD DEPTH MIN.
REMOVE ALL BURRS
SHARP = R.000 - R.003

DRAWN		CHECKED		ENGINEER	
BB	2/24/15	ECB	2/24/15	GGS	2/24/15

TITLE CSA APPROVAL CS649X9Y AND CS649X0Y SERIES INTERCONNECTION

PCB PIEZOTRONICS
3425 WALDEN AVE. DEPEW, NY 14043
(716) 684-0002 E-MAIL: sales@pcb.com

CODE IDENT. NO. 52681 | DWG. NO. 60906

SCALE: NONE | SHEET 2 OF 2

Certificate of Compliance

Certificate: 70021428 **Master Contract:** 184981

Project: 70021428 **Date Issued:** September 25, 2015

Issued to: **Industrial Monitoring Instr. (IMI)**

A Div. of PCB Piezotronics, Inc.
3425 Walden Ave
Depew, NY 14043
USA
Attention: Gordon Singh

The products listed below are eligible to bear the CSA Mark shown with adjacent indicators 'C' and 'US' for Canada and US or with adjacent indicator 'US' for US only or without either indicator for Canada only.

C US

Konstantin Rybalko

Issued by: Konstantin Rybalko

PRODUCTS

CLASS 2258 04 - PROCESS CONTROL EQUIPMENT - Intrinsically Safe, Entity - For Hazardous Locations

Ex ia IIC T4 Ga

Class I, Division 1, Groups A, B, C, D

Class II, Division 1, Groups E, F, G

Class III, Division 1

Models CS649XYY Pressure Sensor; intrinsically safe with entity parameters as shown below; must be installed as per installation drawing 60906.

Electrical ratings: 15 – 30 V dc, max. 100 mA, Operating ambient temperature range: –40 to +100 deg. C, Temperature code T4.

FILE: 62426
ECO: 43847
10/15/2015

Certificate:	70021428	**Master Contract:**	184981
Project:	70021428	**Date Issued:**	September 25, 2015

Entity Parameters:

Ui / Vmax = 30V

Ii / Imax = 100mA

Pi / Pmax = 1W

Ci = 0nF

Li = 28µH

Notes: For Canadian Installations, sensor case must be bonded to ground according to Section 18-182 of the CEC, Part 1.

For junction box and mating connector, containing aluminum, mechanical protection from impact or friction must be provided to avoid ignition hazard.

CLASS 2258 03 - PROCESS CONTROL EQUIPMENT - Intrinsically Safe and Non - Incendive Systems - For Hazardous Locations

Ex ic IIC T4 Gc

Class I, Division 2, Groups A, B, C, D

Models CS649XYY Pressure Sensor; non-incendive with entity parameters as shown below; must be installed as per installation drawing 60906.

Electrical ratings: 15 – 30 V dc, max. 100 mA, Operating ambient temperature range: –40 to +100 deg. C, Temperature code T4.

Entity Parameters:

Ui / Vmax = 30V

Ii / Imax = 100mA

Pi / Pmax = 1W

Ci = 0nF

Li = 28µH

Note: For Canadian Installations, sensor case must be bonded to ground according to Section 18-182 of the CEC, Part 1.

CLASS2258 84 - PROCESS CONTROL EQUIPMENT - Intrinsically Safe Entity - For Hazardous Locations - CERTIFIED TO U.S. STANDARDS

Class I, Zone 0, AEx IIC T4 Ga

Class I, Division 1, Groups A, B, C, D

Class II, Division 1, Groups E, F, G

Class III, Division 1

Models CS649XYY Pressure Sensor; intrinsically safe with entity parameters as shown below; must be installed as per installation drawing 60906.

Electrical ratings: 15 – 30 V dc, max. 100 mA, Operating ambient temperature range: –40 to +100 deg. C, Temperature code T4.

Entity Parameters:

Ui / Vmax = 30V

Ii / Imax = 100mA

Pi / Pmax = 1W

Ci = 0nF

Li = 28µH

Notes: For US Installations, sensor case must be bonded to ground according to Article 501.16 of the NEC.

For junction box and mating connector, containing aluminum, mechanical protection from impact or friction must be provided to avoid ignition hazard.

Certificate:	70021428	**Master Contract:**	184981
Project:	70021428	**Date Issued:**	September 25, 2015

CLASS2258 83 - PROCESS CONTROL EQUIPMENT - Intrinsically Safe and Non - Incendive Systems - For Hazardous Locations - CERTIFIED TO U.S. STANDARDS

Class I, Zone 2, AEx ic IIC T4 Gc

Class I, Division 2, Groups A, B, C, D

Models CS649XYY Pressure Sensor; non-incendive with entity parameters as shown below; must be installed as per installation drawing 60906.

Electrical ratings: 15 – 30 V dc, max. 100 mA, Operating ambient temperature range: –40 to +100 deg. C, Temperature code T4.

Entity Parameters:

Ui / Vmax = 30V

Ii / Imax = 100mA

Pi / Pmax = 1W

Ci = 0nF

Li = 28µH

Note: For US Installations, sensor case must be bonded to ground according to Article 501.16 of the NEC.

APPLICABLE REQUIREMENTS

CAN/CSA-C22.2 No. 61010-1-2012 - Safety requirements for electrical equipment for measurement, control, and laboratory use - Part 1: General requirements

ANSI/ISA-61010-1-2012 - Safety requirements for electrical equipment for measurement, control, and laboratory use - Part 1: General requirements

CAN/CSA C22.2 No. 60079-0-2011 - Explosive atmospheres - Part 0: Equipment - General requirements

ANSI/ISA-60079-0-2013 - Explosive atmospheres - Part 0: Equipment - General requirements

Certificate:	70021428	**Master Contract:**	184981
Project:	70021428	**Date Issued:**	September 25, 2015

CAN/CSA C22.2 No. 60079-11-2014 - Explosive atmospheres - Part 11: Equipment protection by intrinsic safety

ANSI/ISA-60079-11-2014 - Explosive atmospheres - Part 11: Equipment protection by intrinsic safety

CAN/CSA-C22.2 No. 213-R2013 - Non-incendive electrical equipment for use in Class I, Division 2 hazardous locations

ANSI/ISA-12.12.01-2013 - Non-incendive Electrical Equipment for Use in Class I and II, Division 2 and Class III, Divisions 1 and 2 Hazardous (Classified) Locations

UL 913 (8th Edition) - Intrinsically Safe Apparatus and Associated Apparatus for Use in Class I, II, and III, Division 1, Hazardous (Classified) Locations